SUPPORT DOCUMENTATION

Publ. No. 2A01403

© Copyright 1990
CHYRON Corporation
All Rights Reserved

CHYRON
Corporation

5 Hub Drive
Melville, NY 11747

INFINIT! LOGIC DIAGRAMS
Table Of Contents

2A01324	Keyboard Schematics
2A01355	Transition Board (CPU)
2A01357	Keyboard Interface
2A01366	Transform Transition Board
2A01367	Sync Gen. Transition Board
2A01548	Frame Buffer
2A01387	Mix & Effects
2A01396	Transform
2A01510	SIN X/X Encoder
2A01512	SIN X/X RGB
2A01514	Encoder Board
2A01572	Sync Gen Board II
2A01345	RGB/YUV
2A01542	Camera Capture
2A01625	Backplane
2A01760	Transcoder Board II
2A01886	Extended Effects Frame Buffer Vram
2A01874	Extended Effects Frame Buffer

Block Diagrams

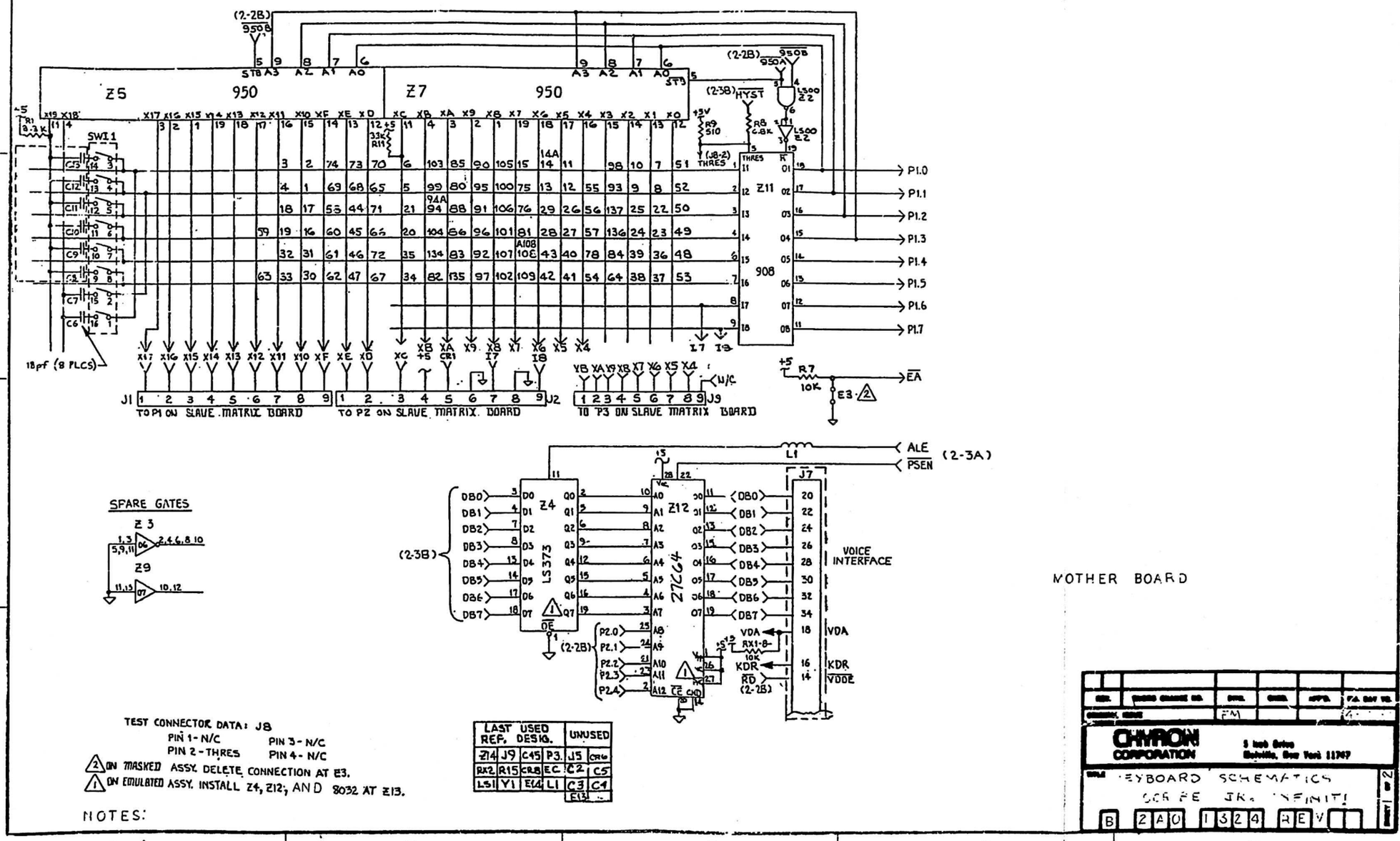
Z5 950
Z7 950
SW1
Z11
908
P1.0
P1.1
P1.2
P1.3
P1.4
P1.5
P1.6
P1.7
18pf (8 PLCS)
J1 TO P1 ON SLAVE MATRIX BOARD
J2 TO P2 ON SLAVE MATRIX BOARD
J9 TO P3 ON SLAVE MATRIX BOARD
EA
SPARE GATES
Z3
Z9
Z4 LS373
Z12 27C64
J7
ALE
PSEN
(2-3A)
(2-38)
VOICE INTERFACE
VDA
KDR
VDDE
MOTHER BOARD
TEST CONNECTOR DATA: J8
PIN 1 - N/C
PIN 2 - THRES
PIN 3 - N/C
PIN 4 - N/C
2 ON MASKED ASSY. DELETE CONNECTION AT E3.
1 ON EMULATED ASSY. INSTALL Z4, Z12, AND 8032 AT Z13.
NOTES:
LAST USED REF. DESIG.
UNUSED
CHYRON CORPORATION
KEYBOARD SCHEMATICS

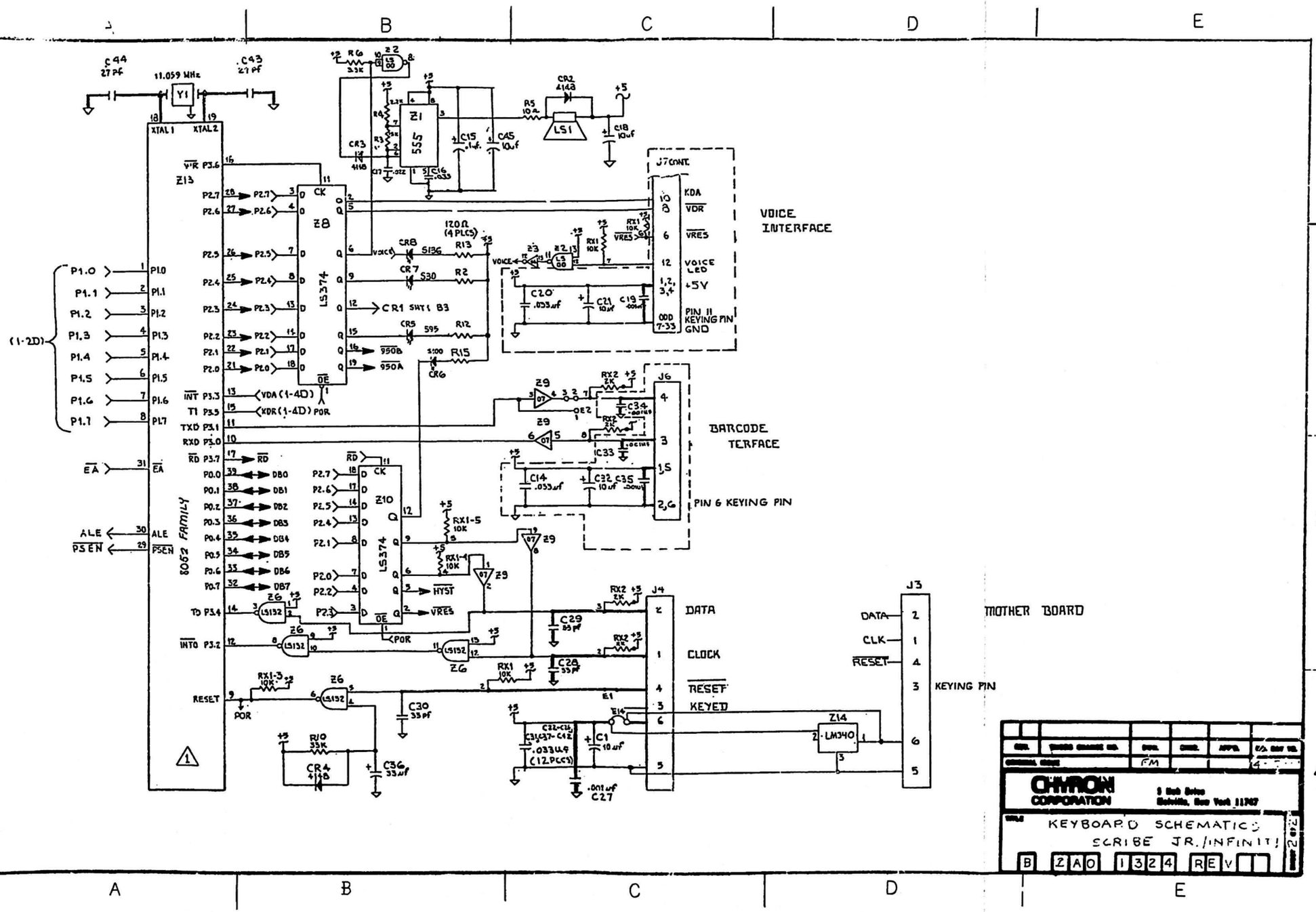

VOICE INTERFACE
BARCODE TERFACE
PIN 6 KEYING PIN
MOTHER BOARD
KEYING PIN
DATA
CLOCK
RESET
KEYED
8052 FAMILY
11.059 MHz
CHYRON CORPORATION
KEYBOARD SCHEMATICS
SCRIBE JR./INFINITY
B ZAO 1324 REV

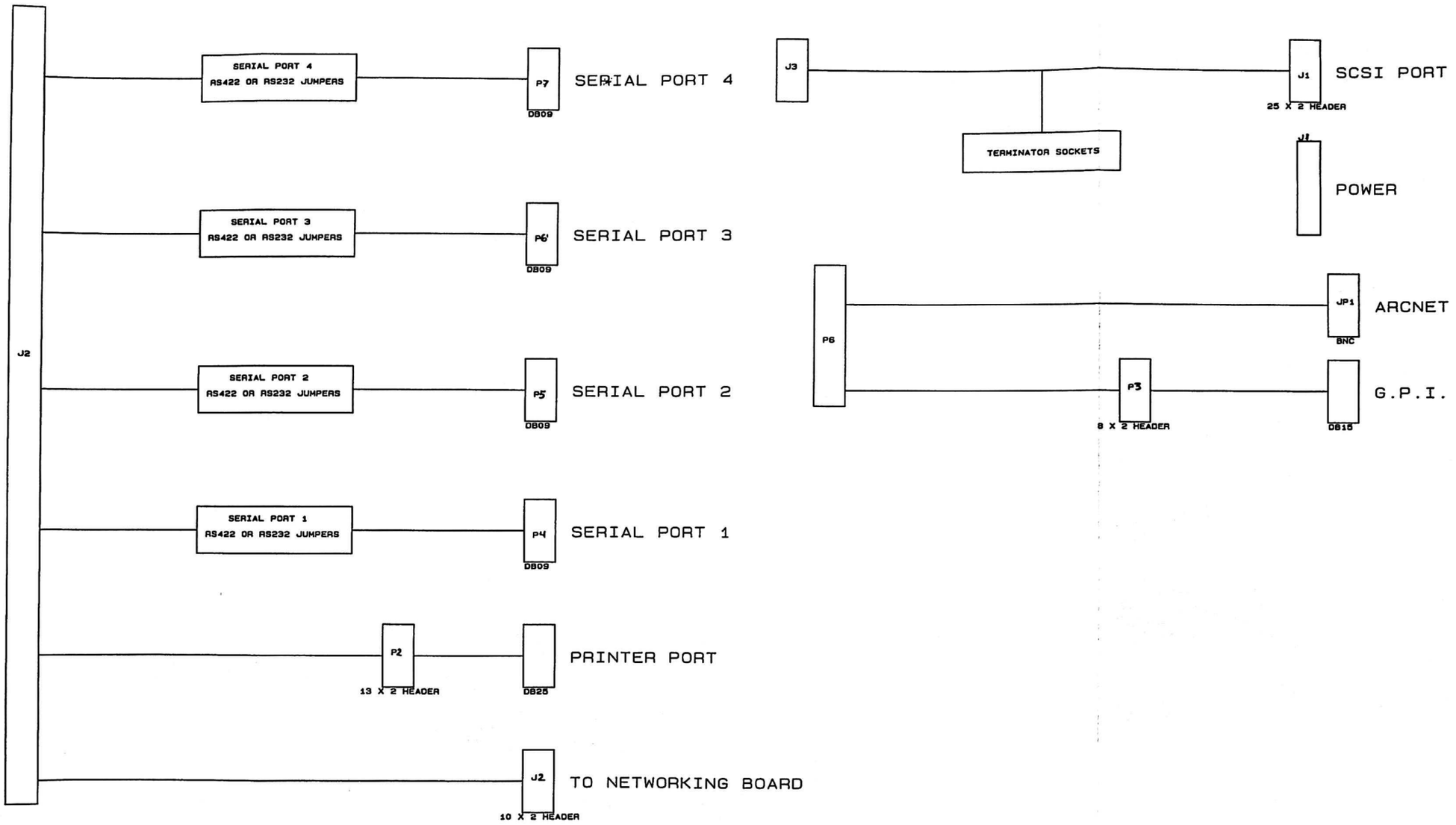

INFINITI TRANSITION BOARD

NOTES:

UNLESS OTHERWISE SPECIFIED

1. ALL RESISTORS ARE IN OHMS 5% 1/4 W
2. ALL CAPACITORS ARE IN MICRO-FARADS
3. ALL VOLTAGES ARE D.C.

REV.	ENGRG CHANGE NO.	DWN	CHKD.	APP'D.	MO. DAY YR.
ORIGINAL ISSUE		DJR			03-29-90

CHYRON CORPORATION
5 Hub Drive
Melville, New York 11747

TITLE: TRANSITION BOARD (CPU) FOR INFINITI

DOCUMENT NUMBER: 2A01355 REV B

SHEET 1 OF 1

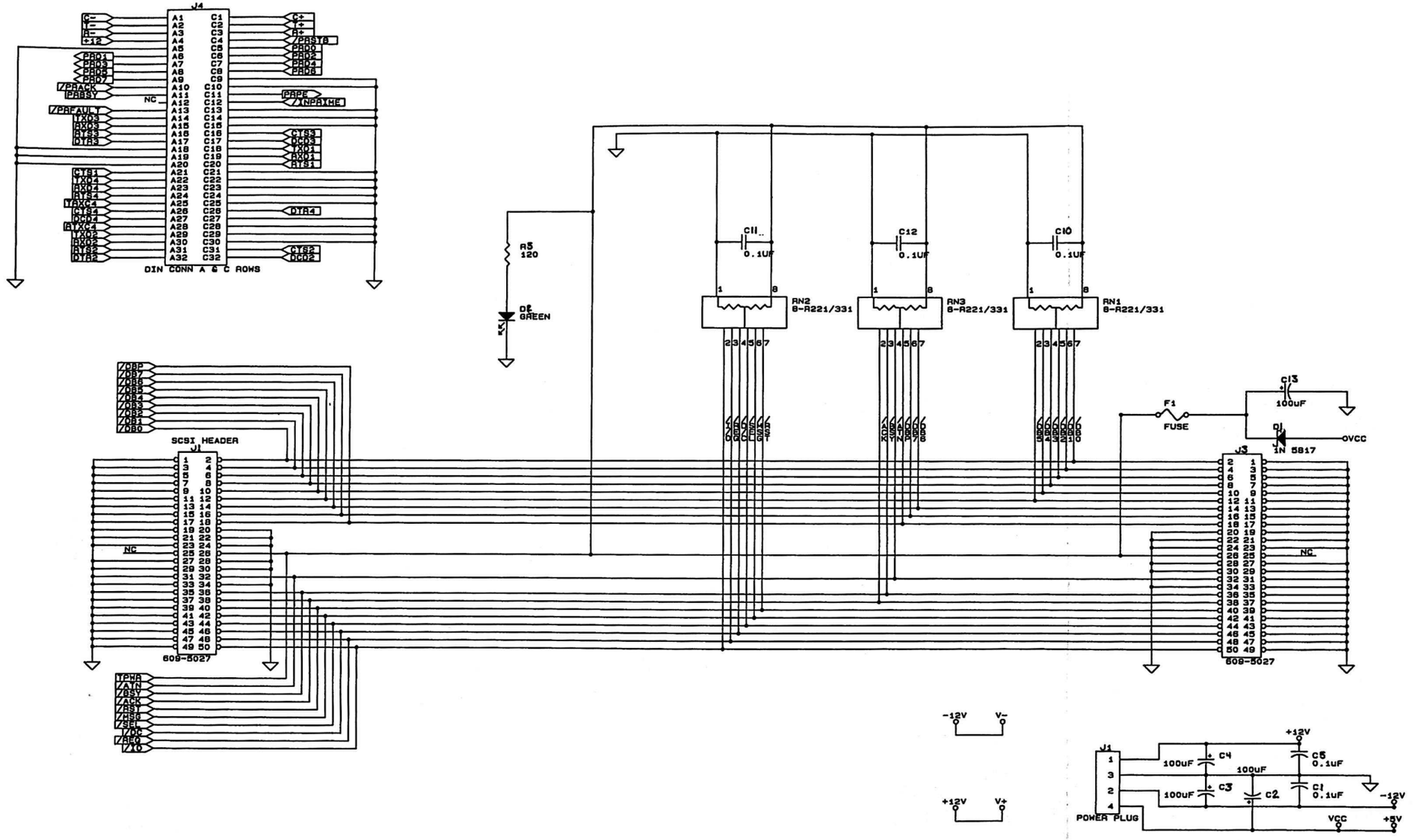

REV.	ENGRG CHANGE NO.	DWN	CHKD.	APP'D.	MO. DAY YR.
ORIGINAL ISSUE		DJR			03-29-90

CHYRON CORPORATION
5 Hub Drive
Melville, New York 11747

TITLE: TRANSITION BOARD (CPU) FOR INFINIT!

DOCUMENT NUMBER: 2A01355 REV B

SHEET 2 OF 3

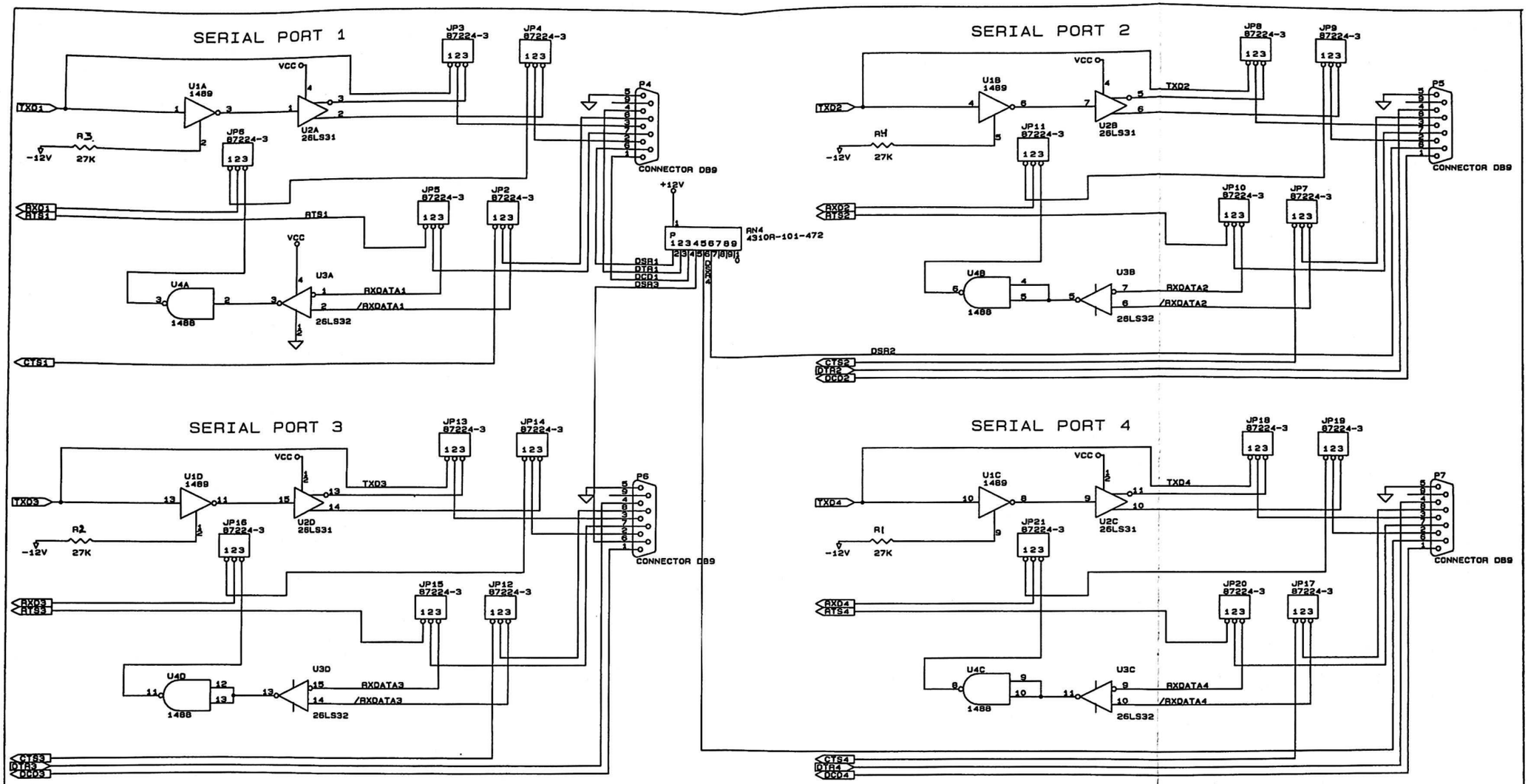

REV.	ENGRG CHANGE NO.	DWN	CHKD.	APP'D.	MO. DAY YR.
ORIGINAL ISSUE		DJR			03-29-90

CHYRON CORPORATION
5 Hub Drive
Melville, New York 11747

TITLE: TRANSITION BOARD (CPU) FOR INFINIT!

DOCUMENT NUMBER: 2A01355 REV B

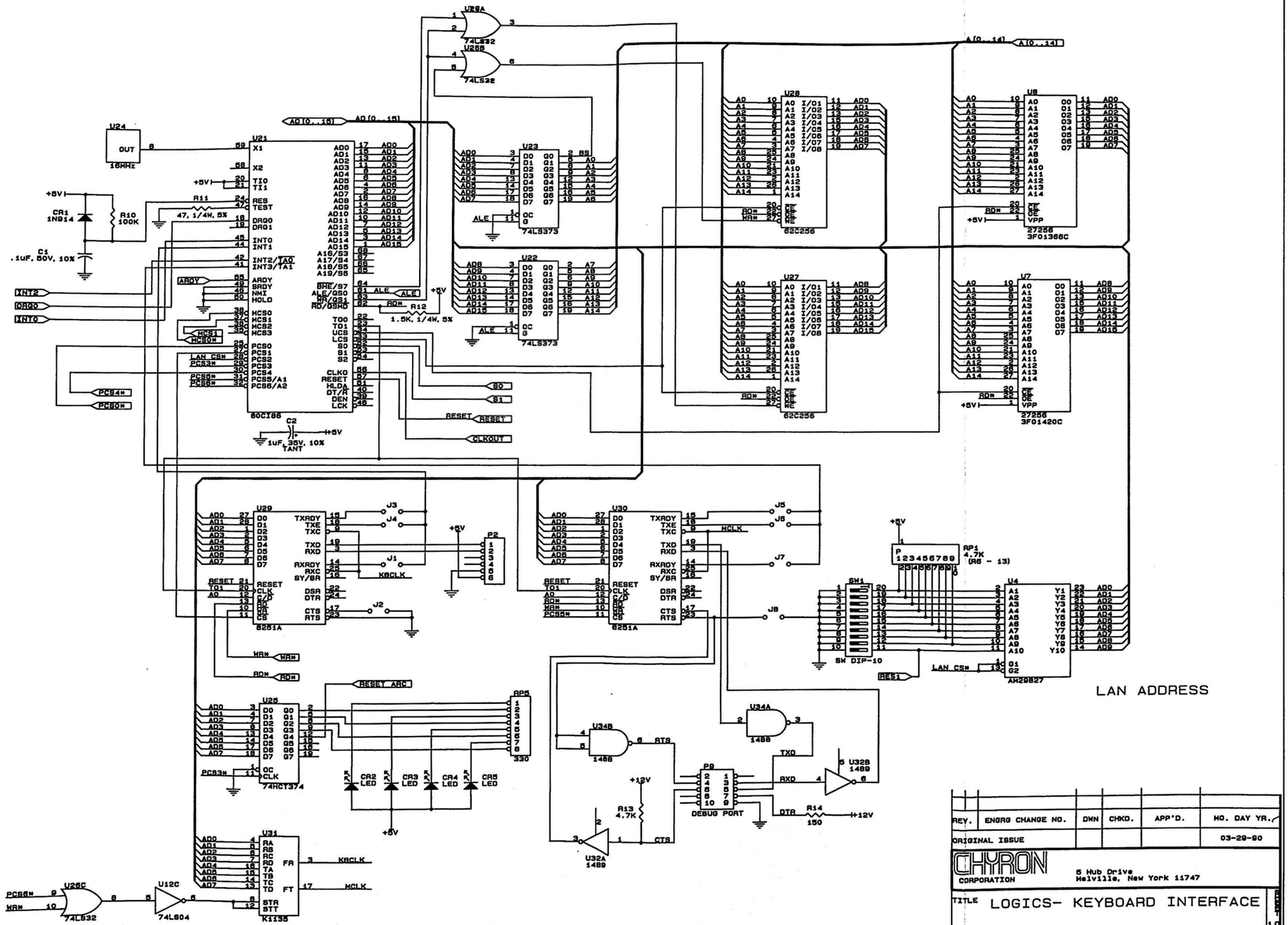

REV.	ENGRG CHANGE NO.	DWN	CHKD.	APP'D.	MO. DAY YR.
ORIGINAL ISSUE					03-29-90

CHYRON CORPORATION
5 Hub Drive
Melville, New York 11747

TITLE LOGICS- KEYBOARD INTERFACE

DOCUMENT NUMBER 2A01357 REV A

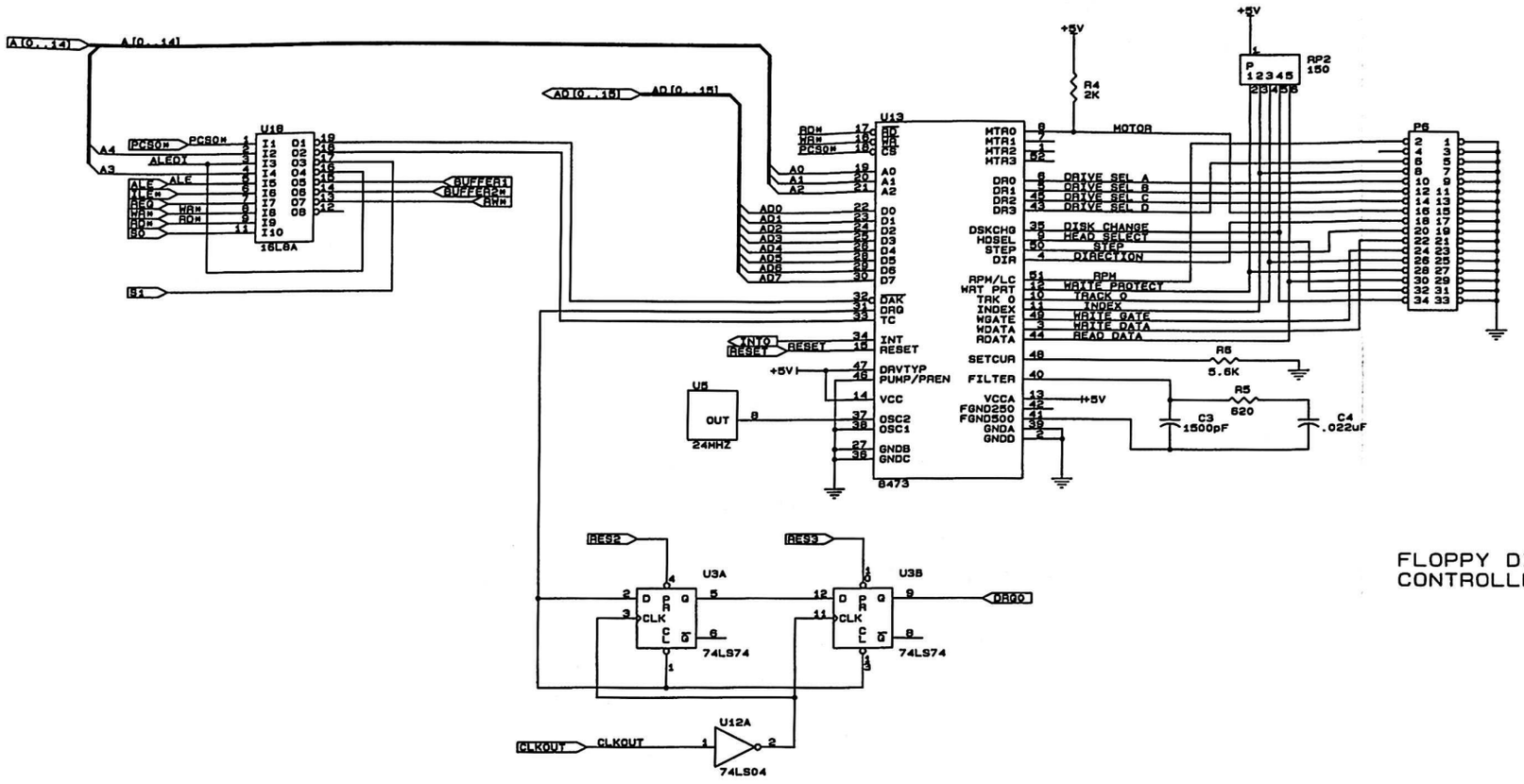

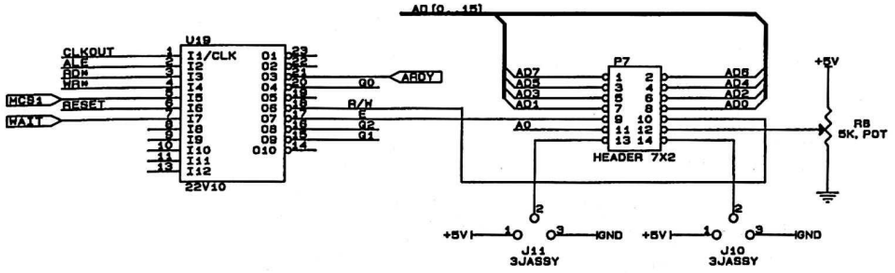

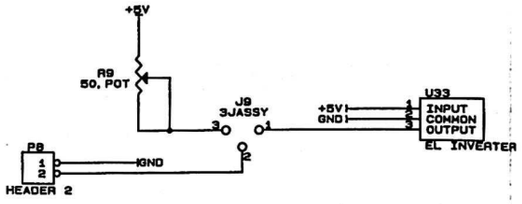

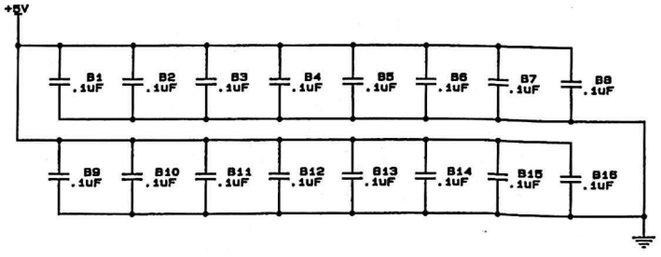

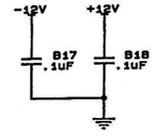

REV.	ENGRG CHANGE NO.	DWN	CHKD.	APP'D.	MO. DAY YR.
ORIGINAL ISSUE					03-29-90

CHYRON CORPORATION
5 Hub Drive
Melville, New York 11747

TITLE: LOGICS- KEYBOARD INTERFACE

DOCUMENT NUMBER: 2A01357 REV A

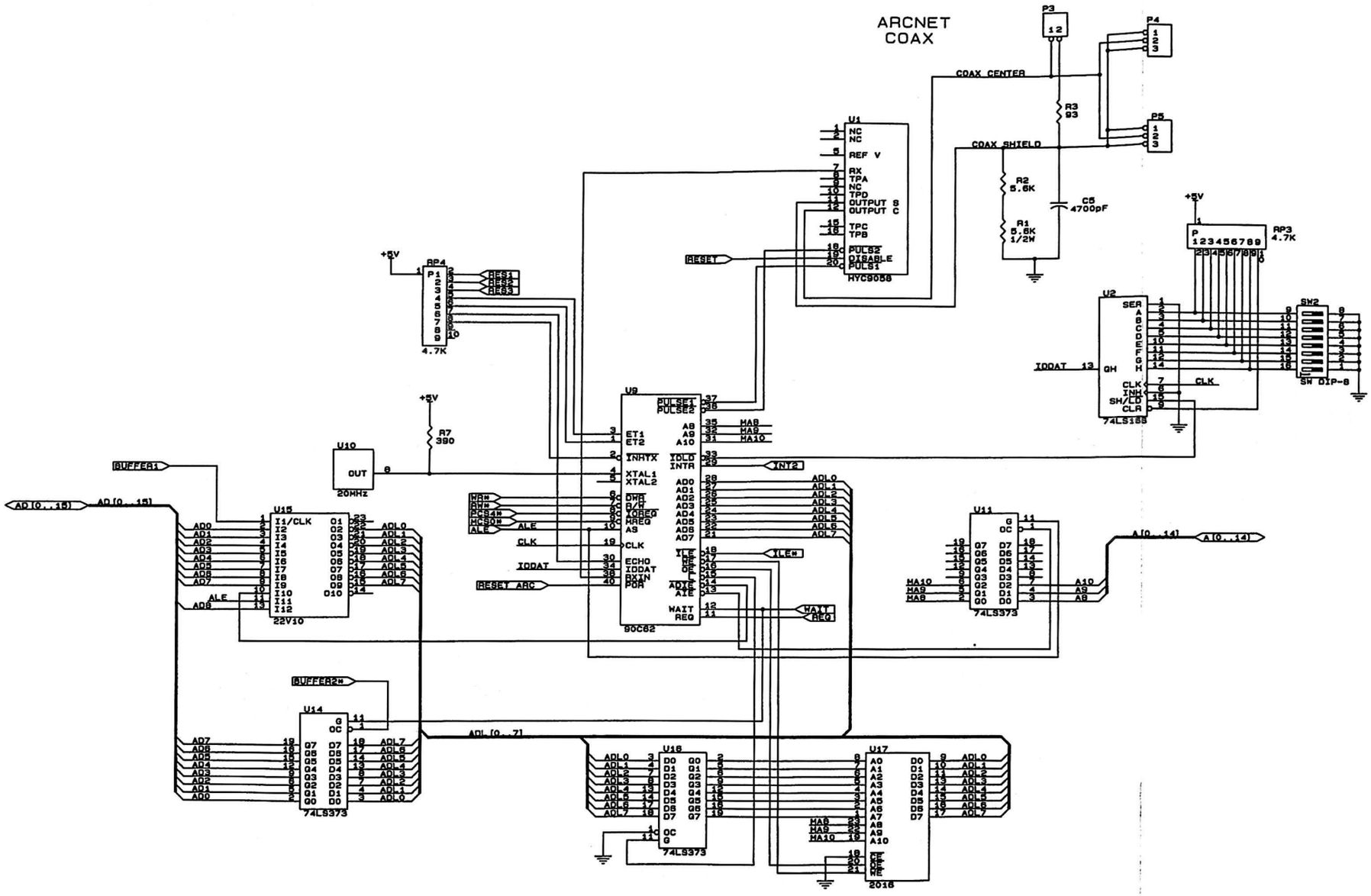

REV.	ENGRG CHANGE NO.	DWN	CHKD.	APP'D.	MO. DAY YR.
ORIGINAL ISSUE					03-29-90

CHYRON CORPORATION
5 Hub Drive
Melville, New York 11747

TITLE: LOGICS- KEYBOARD INTERFACE

DOCUMENT NUMBER: 2A01357 REV A

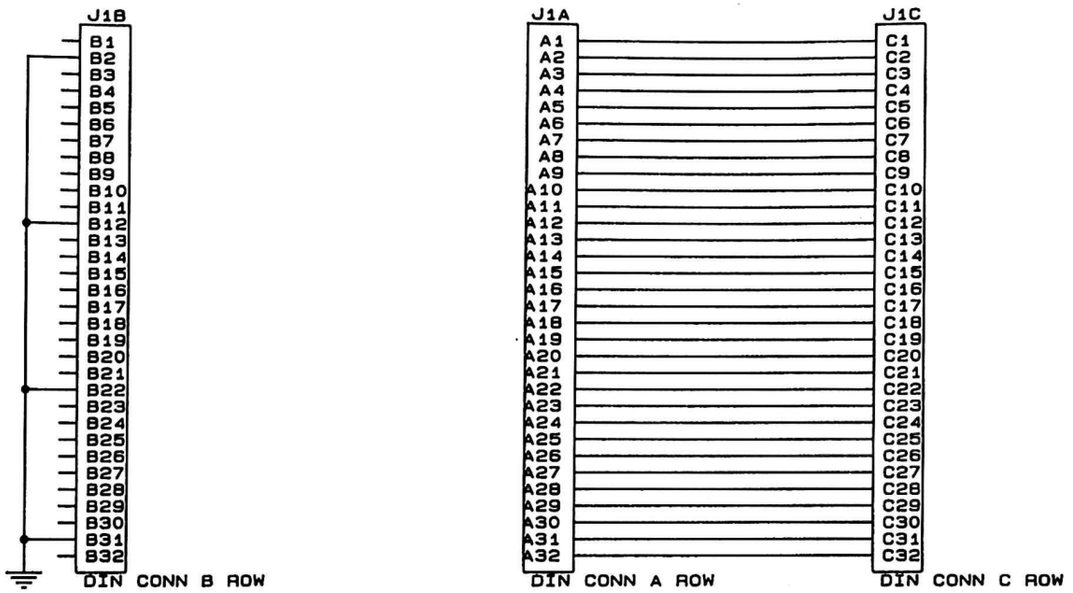

REV.	ENGRG CHANGE NO.	DWN	CHKD.	APP'D.	MO. DAY YR.
ORIGINAL ISSUE					09-28-89

CHYRON CORPORATION
5 Hub Drive
Melville, New York 11747

TITLE: TRANSFORM TRANSITION BOARD FOR INFINIT!

DOCUMENT NUMBER: 2A01366 REV 0

SHEET 1 OF 1

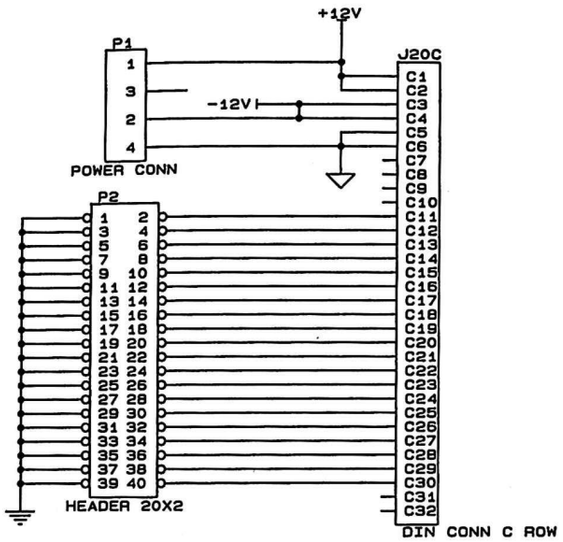

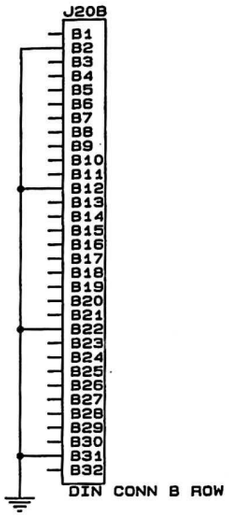

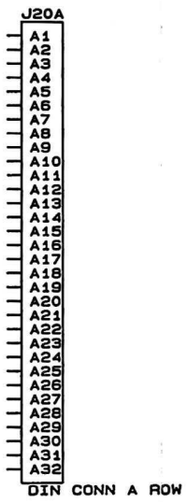

REV.	ENGRG CHANGE NO.	DWN	CHKD.	APP'D.	MO. DAY YR.
ORIGINAL ISSUE					10-02-89

CHYRON CORPORATION
5 Hub Drive
Melville, New York 11747

TITLE
SYNC GEN TRANSITION BOARD FOR INFINIT!

DOCUMENT NUMBER
2A01367

SHEET 1 OF 1

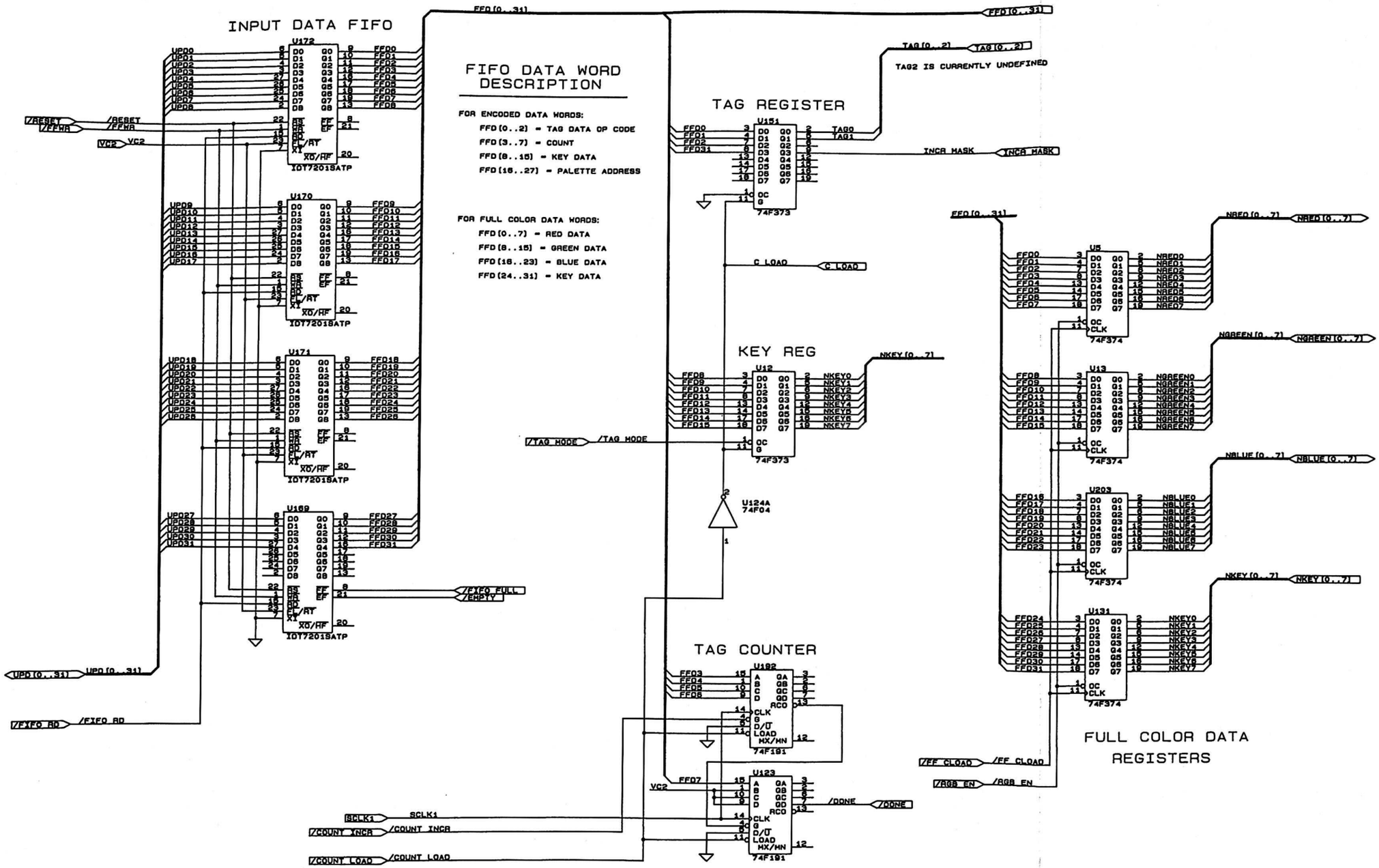

The count must be (20H - the number of pixels to be written).
For example, loading 1FH will write one pixel and
loading 0 will write 32 pixels.

REV.	ENGRG CHANGE NO.	DWN	CHKD.	APP'D.	MO. DAY YR.
ORIGINAL ISSUE		SH			4-17-92

CHYRON CORPORATION
5 Hub Drive
Melville, New York 11747

TITLE: FRAME BUFFER FOR INFINIT! FIFO, TAG COUNTER, RGB REGS (REV C ARTWORK)

DOCUMENT NUMBER: 2A01548 REV G

SH 1 OF 15

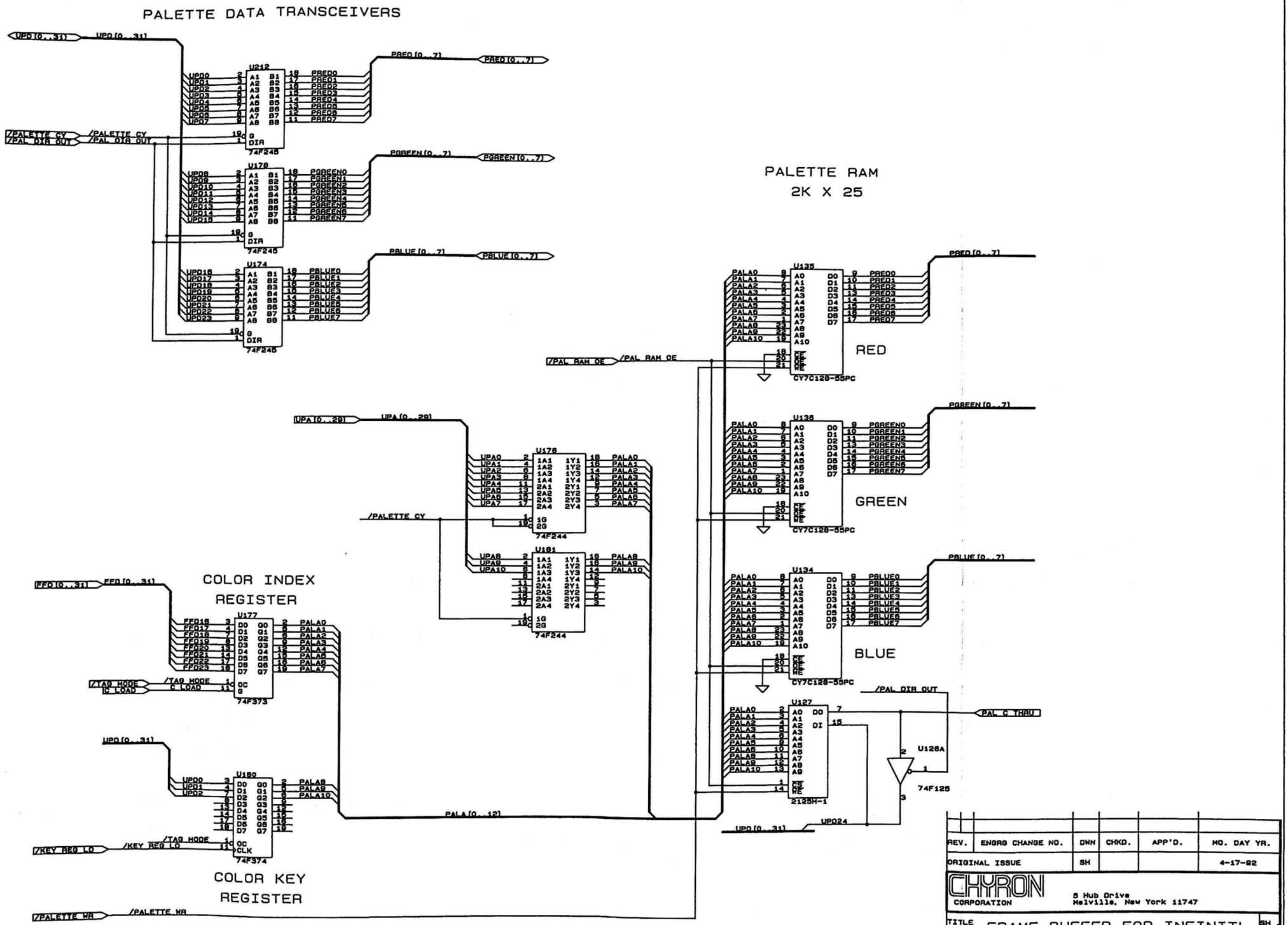

REV.	ENGRG CHANGE NO.	DWN	CHKD.	APP'D.	MO. DAY YR.
ORIGINAL ISSUE		SH			4-17-92

CHYRON CORPORATION
5 Hub Drive
Melville, New York 11747

TITLE: FRAME BUFFER FOR INFINIT!
COLOR REGISTERS AND PALETTE
(REV C ARTWORK)

DOCUMENT NUMBER: 2A01548 REV G

SH 2 OF 15

VRAM OUTPUT REGISTERS

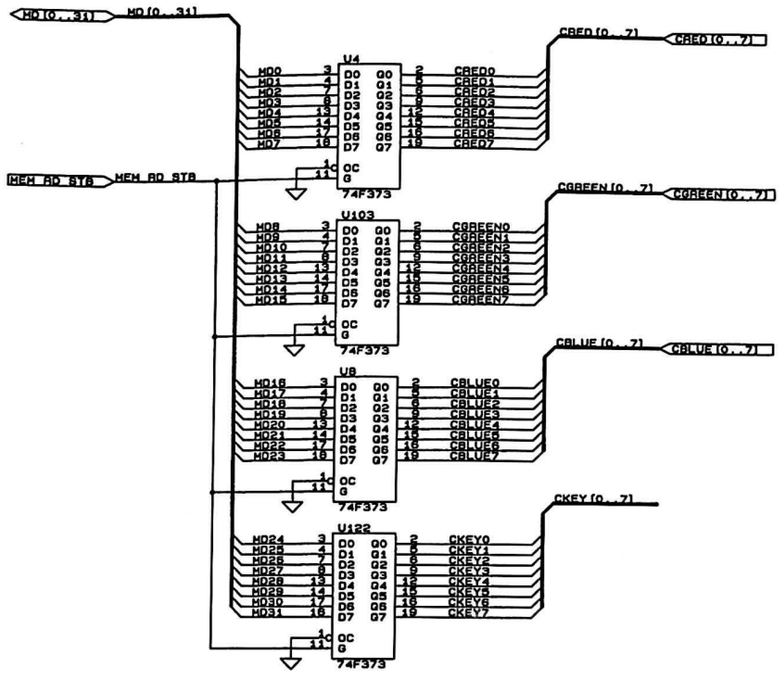

MEMORY DATA PULL-UPS

USED FOR REV. A VRAMS BY TOSHIBA.

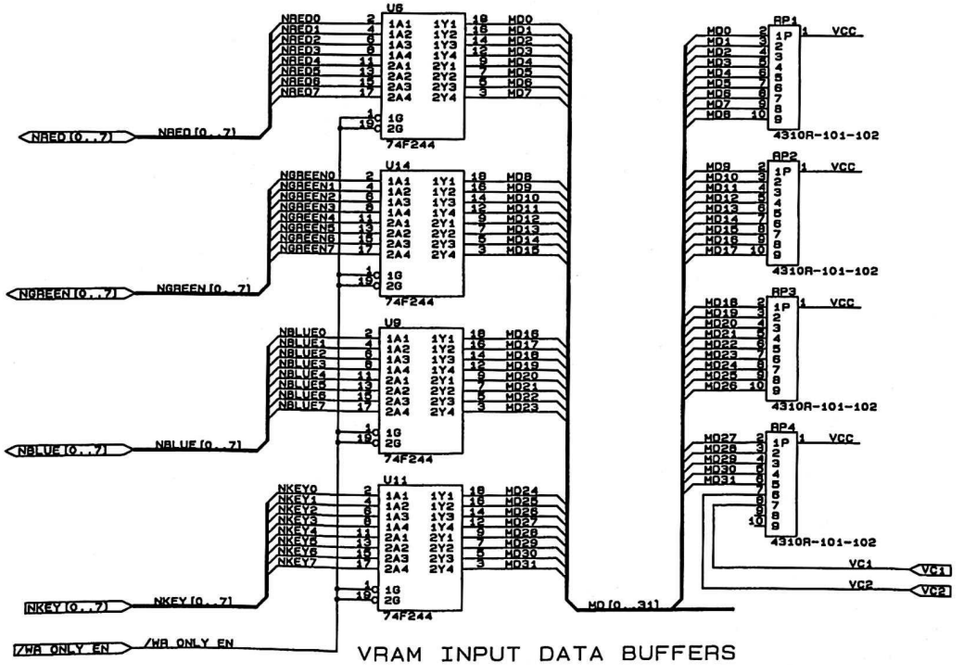

VRAM INPUT DATA BUFFERS FOR NON-RMWS

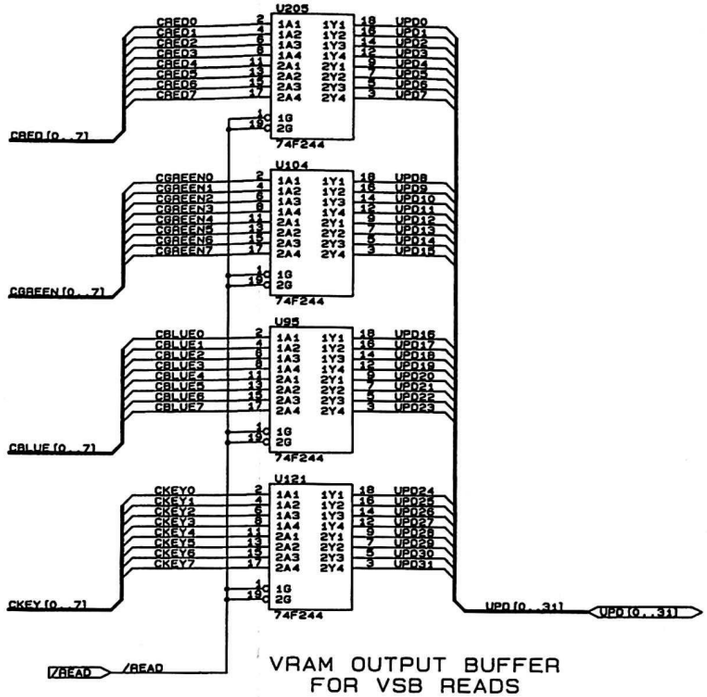

VRAM OUTPUT BUFFER FOR VSB READS

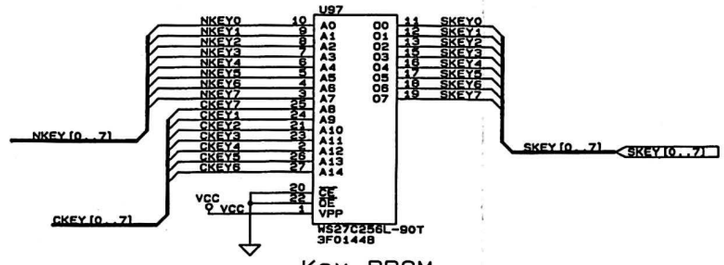

Key PROM

CALCULATES: NKEY + CKEY (1 - NKEY)

REV.	ENGRG CHANGE NO.	DWN	CHKD.	APP'D.	MO. DAY YR.
ORIGINAL ISSUE		SH			03-11-91

CHYRON CORPORATION
5 Hub Drive
Melville, New York 11747

TITLE: FRAME BUFFER FOR INFINIT!
VRAM I/O BUFFERS & REGISTERS
(REV C ARTWORK)

DOCUMENT NUMBER: 2A01548 REV (-

SH 3 OF 15

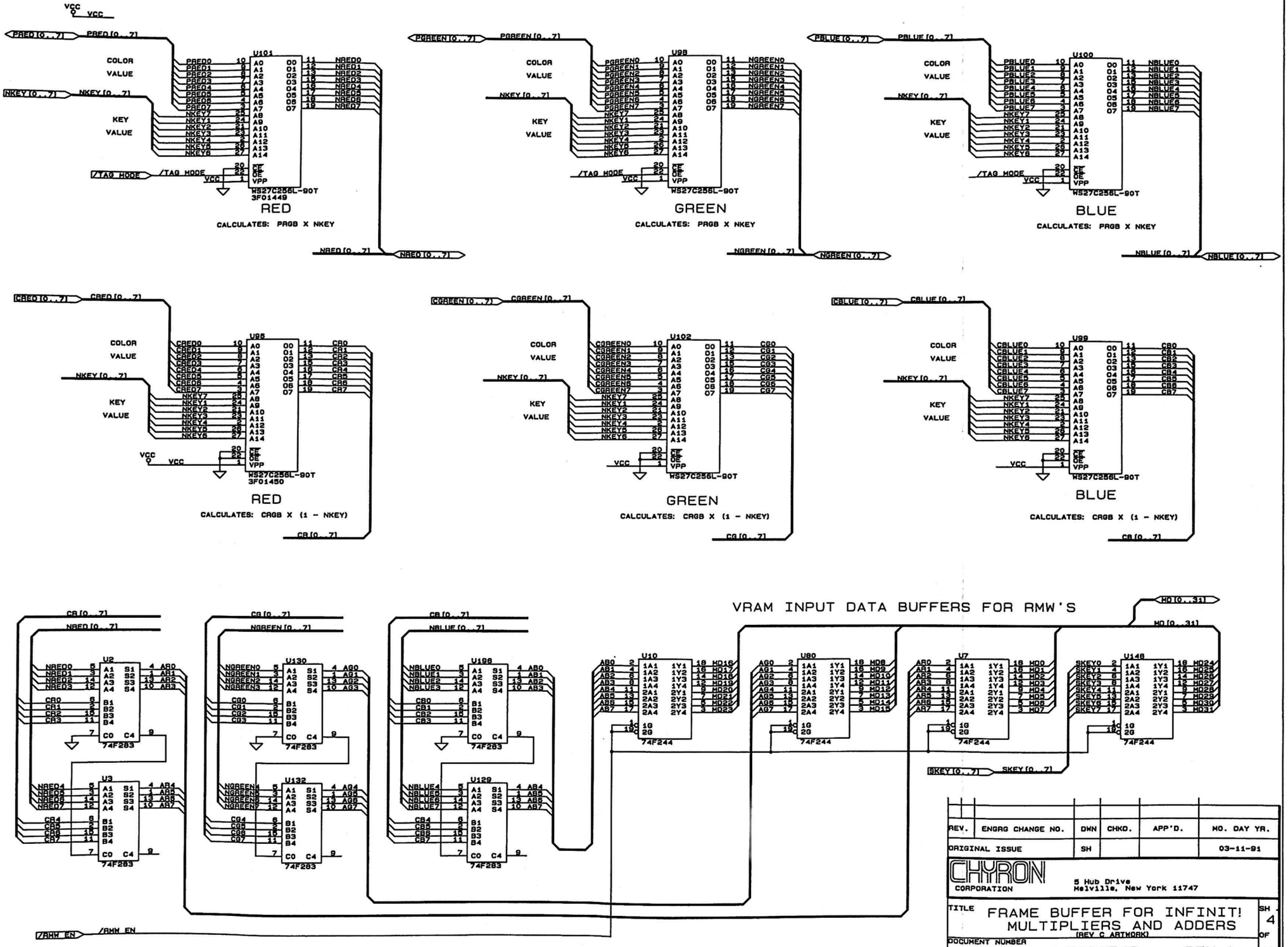

REV.	ENGRG CHANGE NO.	DWN	CHKD.	APP'D.	MO. DAY YR.
ORIGINAL ISSUE		SH			03-11-91

CHYRON CORPORATION
5 Hub Drive
Melville, New York 11747

TITLE: FRAME BUFFER FOR INFINIT! MULTIPLIERS AND ADDERS (REV C ARTWORK)

DOCUMENT NUMBER: 2A01548 REV C

SH 4 OF 15

VERTICAL DISPLAY COUNTER

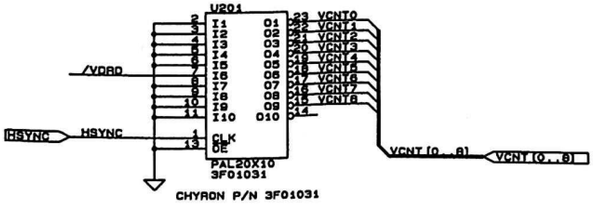

CHYRON P/N 3F01031

9 BITS FROM VCNT PLUS ODD/EVEN GIVE 1024 LINE ADDRESSABILITY

BUFFER SELECT PAL

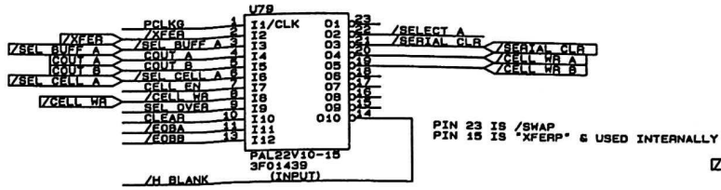

PIN 23 IS /SWAP
PIN 15 IS 'XFERP' & USED INTERNALLY

SERIAL OUTPUT ENABLE PALS

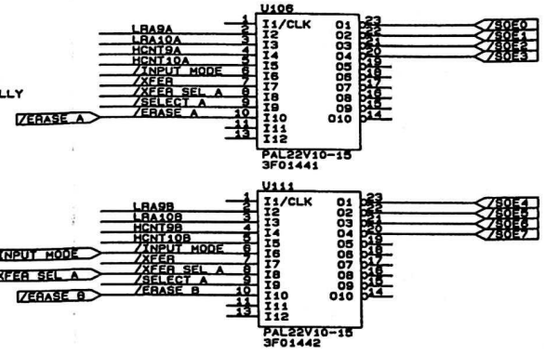

BUFFER A HORIZONTAL DISPLAY COUNTERS

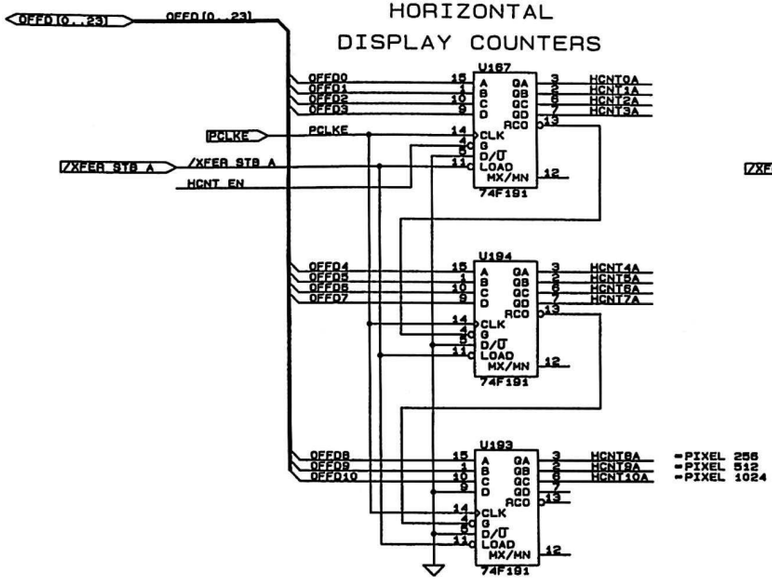

BUFFER B HORIZONTAL DISPLAY COUNTERS

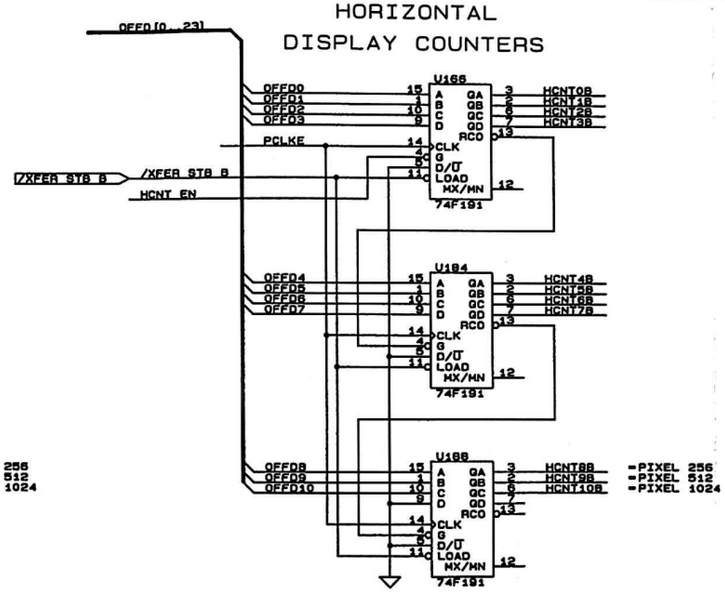

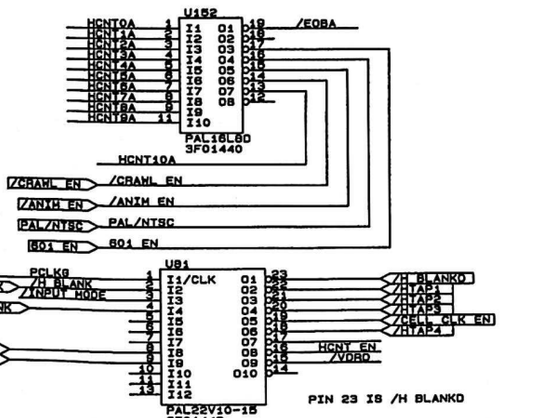

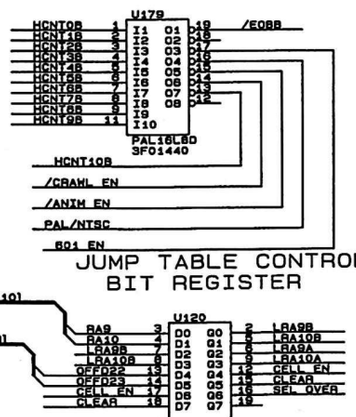

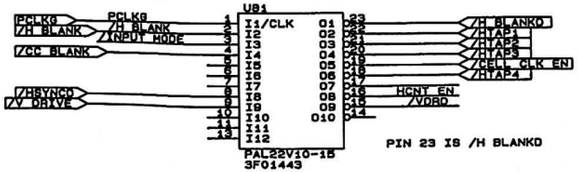

PIN 23 IS /H BLANKO

JUMP TABLE CONTROL BIT REGISTER

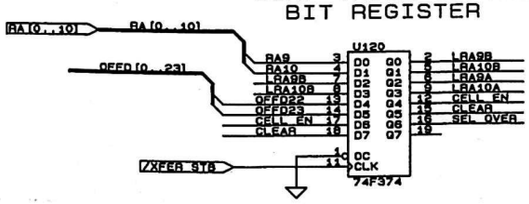

Horizontal Blanking Delay

REV.	ENGRG CHANGE NO.	DWN	CHKD.	APP'D.	MO. DAY YR.
ORIGINAL ISSUE		SH			03-11-91

CHYRON CORPORATION
5 Hub Drive
Melville, New York 11747

TITLE: FRAME BUFFER FOR INFINIT! VIDEO ADDRESS GENERATORS (REV C ARTWORK)

DOCUMENT NUMBER: 2A01548 REV G

SH 5 OF 15

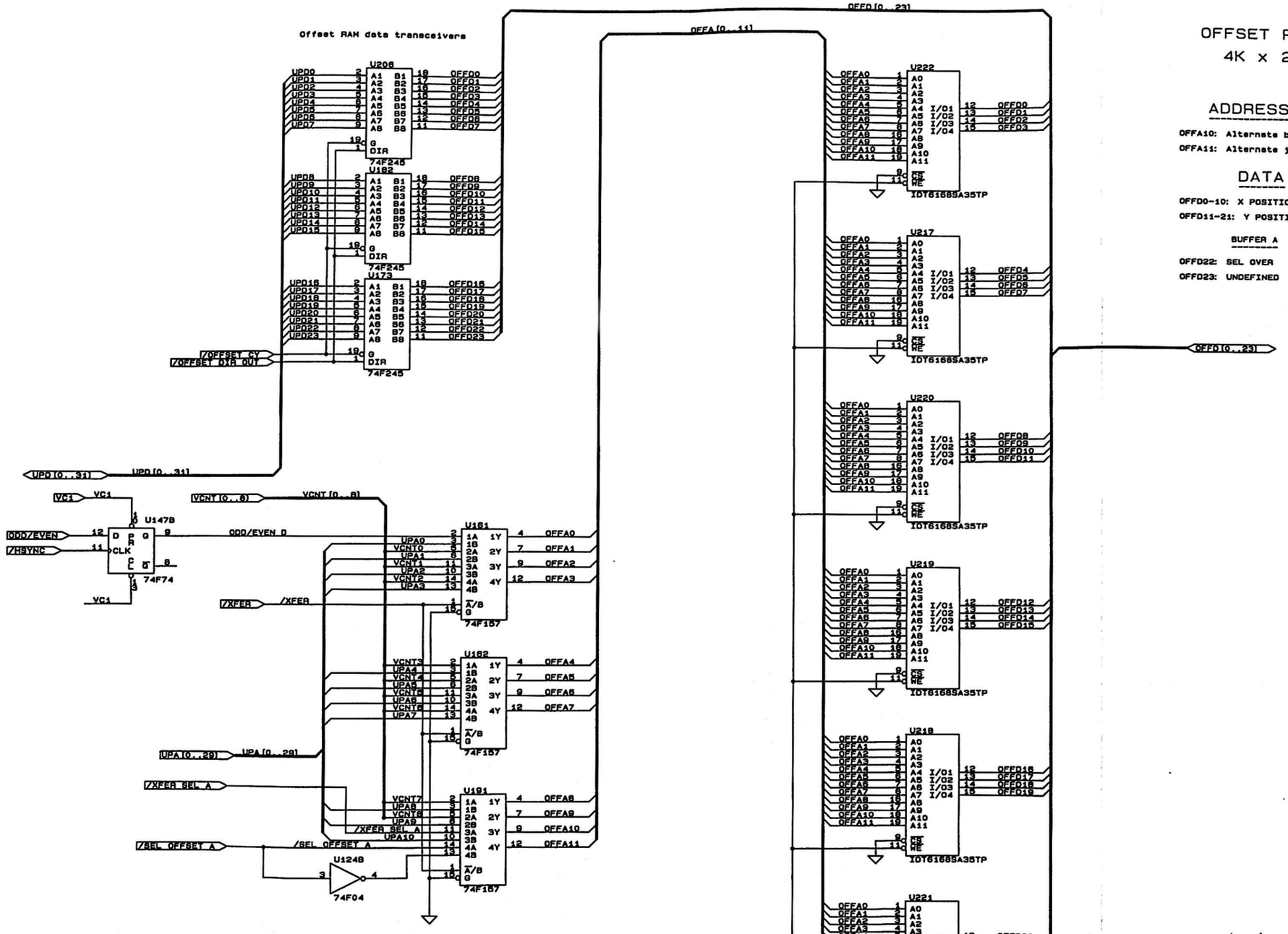

OFFSET RAMS
4K x 24

ADDRESSING

OFFA10: Alternate buffer select

OFFA11: Alternate jump table select

DATA

OFFD0-10: X POSITION OFFSET

OFFD11-21: Y POSITION OFFSET

	BUFFER A	BUFFER B
OFFD22:	SEL OVER	CELL EN
OFFD23:	UNDEFINED	CLEAR

REV.	ENGRG CHANGE NO.	DWN	CHKD.	APP'D.	MO. DAY YR.
ORIGINAL ISSUE		SH			03-11-91

CHYRON CORPORATION
5 Hub Drive
Melville, New York 11747

TITLE: FRAME BUFFER FOR INFINIT!
JUMP TABLES
(REV C ARTWORK)

SH 6 OF 15

DOCUMENT NUMBER: 2A01548 REV 6

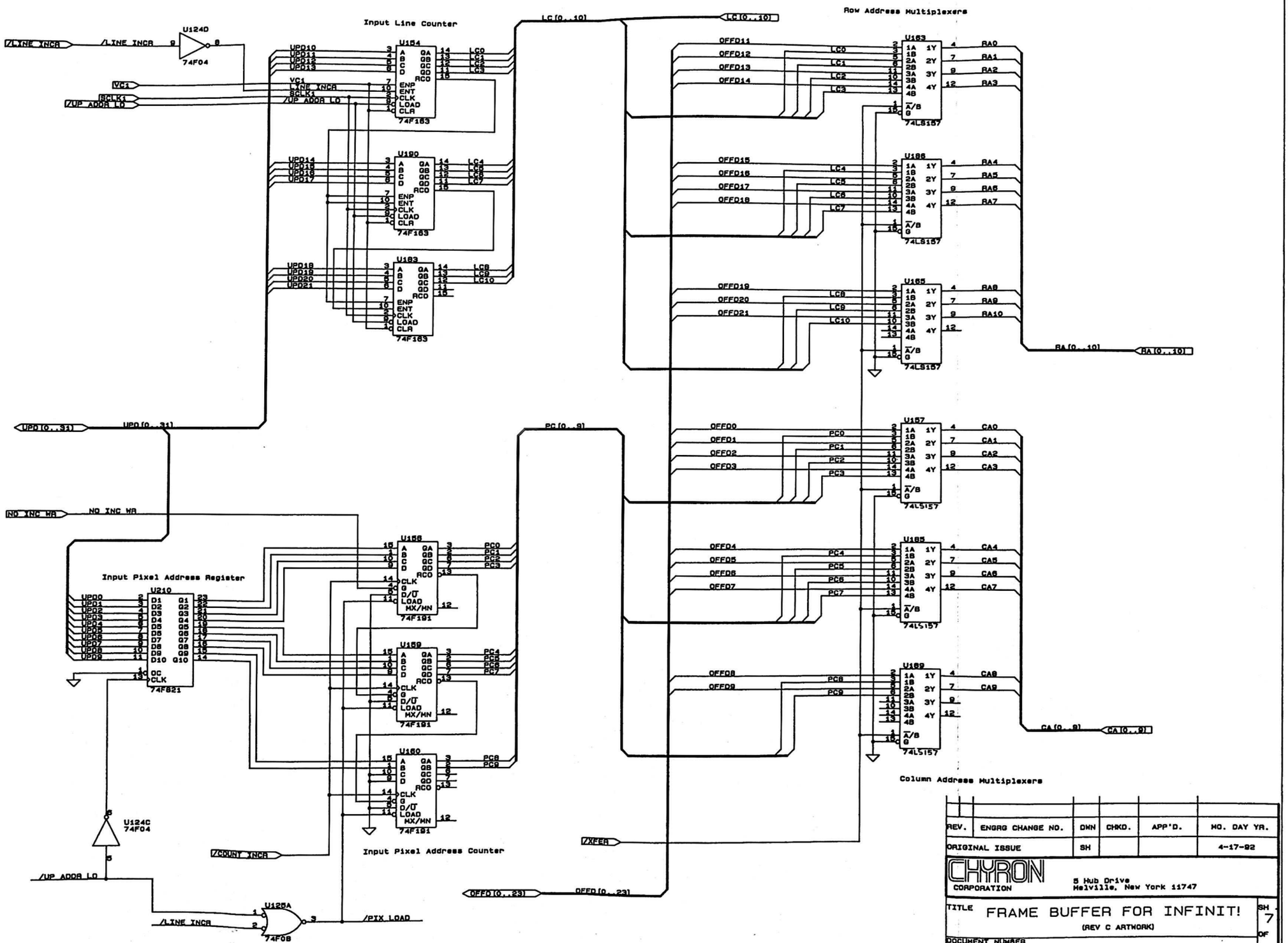
Input Line Counter
Row Address Multiplexers
Column Address Multiplexers
Input Pixel Address Register
Input Pixel Address Counter
U124D
74F04
U154
U190
U183
74F163
U163
U186
U165
74LS157
U156
U159
U160
74F191
U157
U185
U169
U210
74F821
U124C
U125A
74F08
/LINE INCR
/UP ADDR LD
VC1
SCLK1
UPD[0..31]
LC[0..10]
PC[0..9]
NO INC WR
/COUNT INCR
/XFER
OFFD[0..23]
/PIX LOAD
RA[0..10]
CA[0..9]
REV.
ENGRG CHANGE NO.
DWN
CHKD.
APP'D.
MO. DAY YR.
ORIGINAL ISSUE
SH
4-17-92
CHYRON CORPORATION
5 Hub Drive
Melville, New York 11747
TITLE
FRAME BUFFER FOR INFINIT!
(REV C ARTWORK)
SH 7 OF 15
DOCUMENT NUMBER
2A01548
REV G

MEMORY ADDRESS BUS DRIVERS

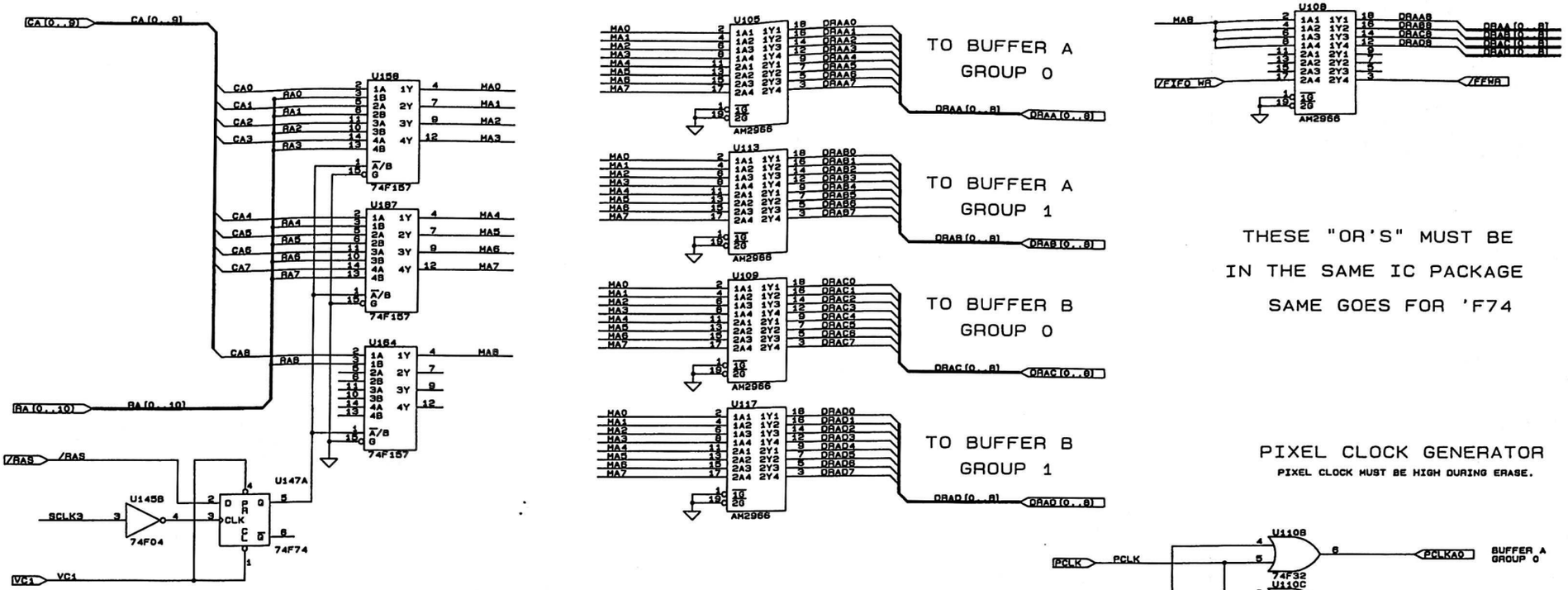

THESE "OR'S" MUST BE IN THE SAME IC PACKAGE SAME GOES FOR 'F74

PIXEL CLOCK GENERATOR

PIXEL CLOCK MUST BE HIGH DURING ERASE.

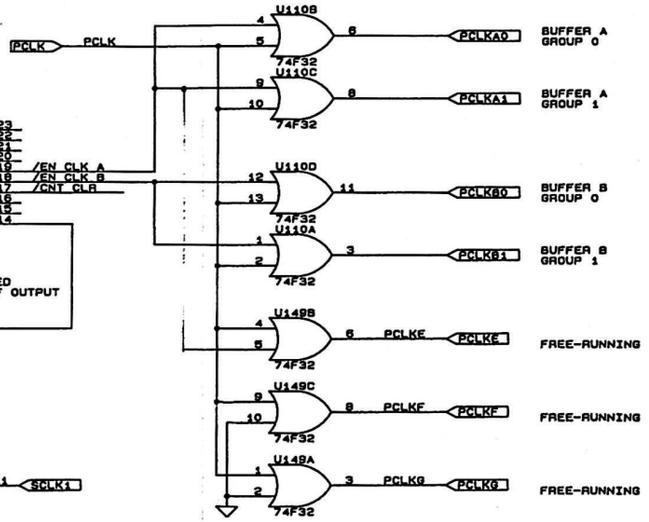

DRAM ADDRESS CONTROL PALS AND DRIVERS

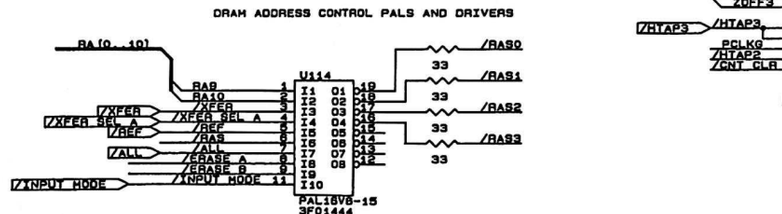

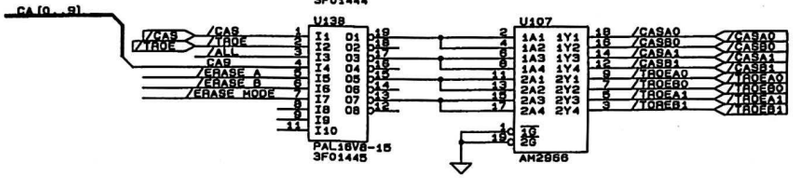

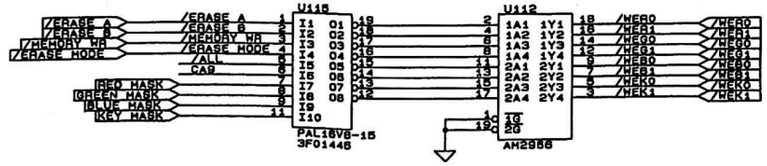

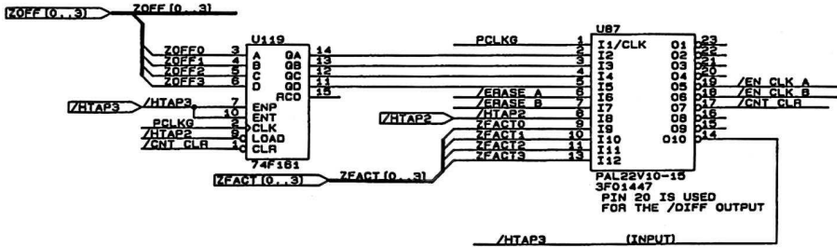

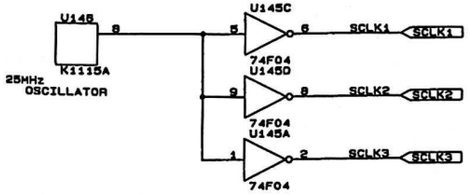

PROCESSOR CLOCK GENERATOR

ALL THREE INVERTERS MUST BE IN THE SAME PACKAGE!

REV.	ENGRG CHANGE NO.	DWN	CHKD.	APP'D.	MO. DAY YR.
ORIGINAL ISSUE		SH			09-27-91

CHYRON CORPORATION
5 Hub Drive
Melville, New York 11747

TITLE
FRAME BUFFER FOR INFINIT!
VRAM CONTROL SIGNAL DRIVERS
(REV C ARTWORK)

DOCUMENT NUMBER
2A01548 REV C

SH 8 OF 15

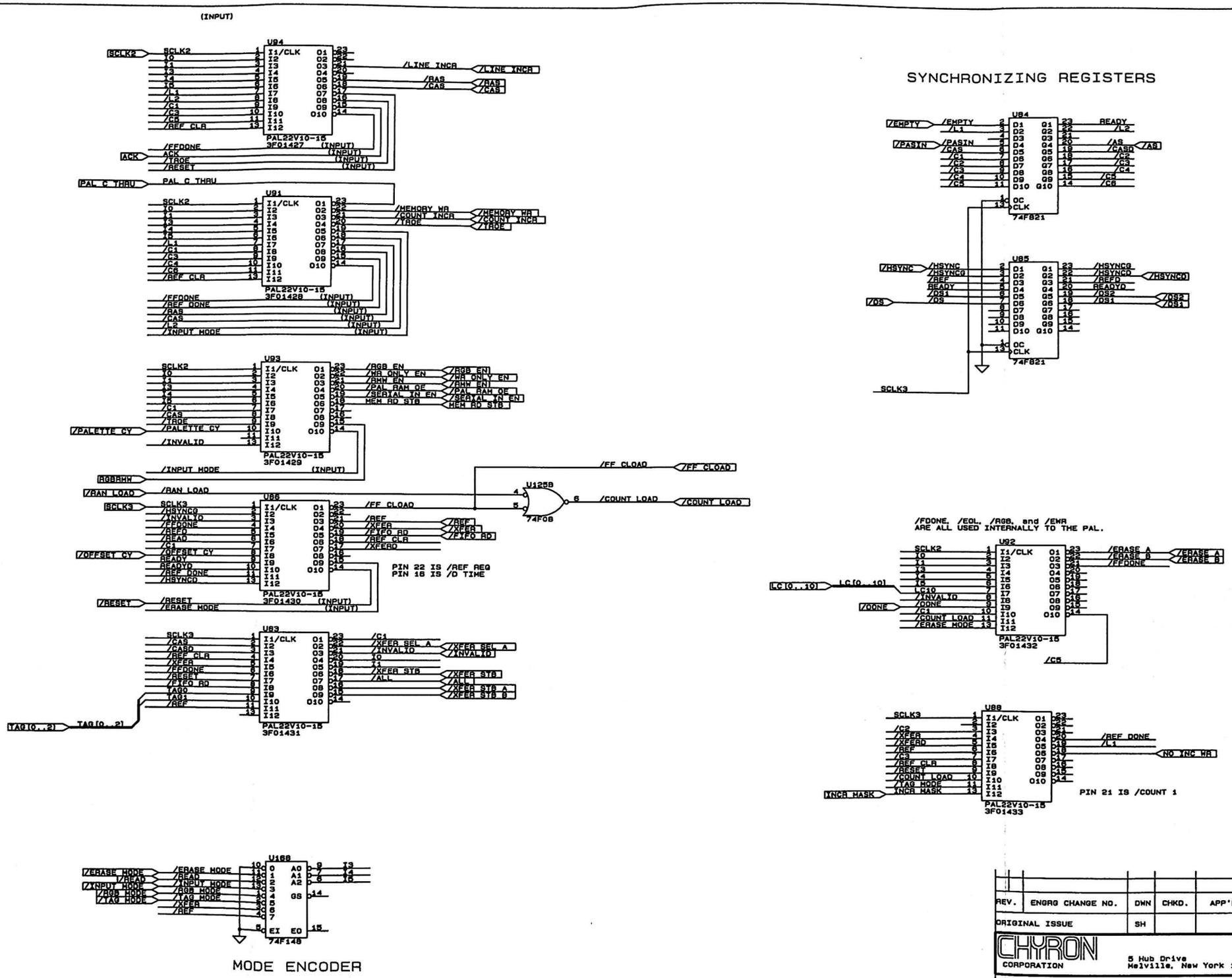
(INPUT)
U94
SCLK2
/LINE INCR
/RAS
/CAS
PAL22V10-15
3F01427
/FFDONE
ACK
/TRDE
/RESET
PAL C THRU
U91
/MEMORY WR
/COUNT INCR
/TRDE
PAL22V10-15
3F01428
/REF DONE
/RAS
/CAS
/L2
/INPUT MODE
U93
/RGB EN
/WR ONLY EN
/RMW EN
/PAL RAM OE
/SERIAL IN EN
MEM RD STB
/PALETTE CY
/INVALID
PAL22V10-15
3F01429
RGBRMW
/RAM LOAD
U86
SCLK3
/HSYNCG
/INVALID
/FFDONE
/REFD
/READ
/C1
/OFFSET CY
READY
READYD
/REF DONE
/HSYNCD
/REF
/XFER
/FXFO RD
/REF CLR
/XFERD
PIN 22 IS /REF REQ
PIN 18 IS /D TIME
/RESET
/ERASE MODE
PAL22V10-15
3F01430
U125B
74F08
/FF CLOAD
/COUNT LOAD
U83
/C1
/XFER SEL A
/INVALID
/XFER STB
/ALL
/XFER STB A
/XFER STB B
TAG0
TAG1
/REF
TAG[0..2]
PAL22V10-15
3F01431
U168
/ERASE MODE
/READ
/INPUT MODE
/RGB MODE
/TAG MODE
/XFER
/REF
GS
EI
EO
74F148
MODE ENCODER
SYNCHRONIZING REGISTERS
U84
/EMPTY
/L1
/PASIN
/CAS
READY
/L2
/AS
/CASD
/C2
/C3
/C4
/C5
/C6
74F821
U85
/HSYNC
/HSYNCG
/REFD
READYD
/DS1
/DS
/DS2
/HSYNCD
SCLK3
/FDONE, /EOL, /RGB, and /EWR
ARE ALL USED INTERNALLY TO THE PAL.
U92
SCLK2
LC[0..10]
/ZOONE
/INVALID
/DONE
/COUNT LOAD
/ERASE MODE
/ERASE A
/ERASE B
/FFDONE
/C5
PAL22V10-15
3F01432
U88
SCLK3
/C2
/XFER
/XFERD
/REF
/C3
/REF CLR
/RESET
/COUNT LOAD
/TAG MODE
XNCR MASK
/REF DONE
/L1
NO XNC WR
PIN 21 IS /COUNT 1
PAL22V10-15
3F01433
REV. ENGRG CHANGE NO. DWN CHKD. APP'D. MO. DAY YR.
ORIGINAL ISSUE SH 03-11-91
CHYRON CORPORATION
5 Hub Drive
Melville, New York 11747
TITLE
FRAME BUFFER FOR INFINIT!
PROCESSOR CONTROL
(REV C ARTWORK)
DOCUMENT NUMBER
2A01548 REV G
SH 9 OF 15

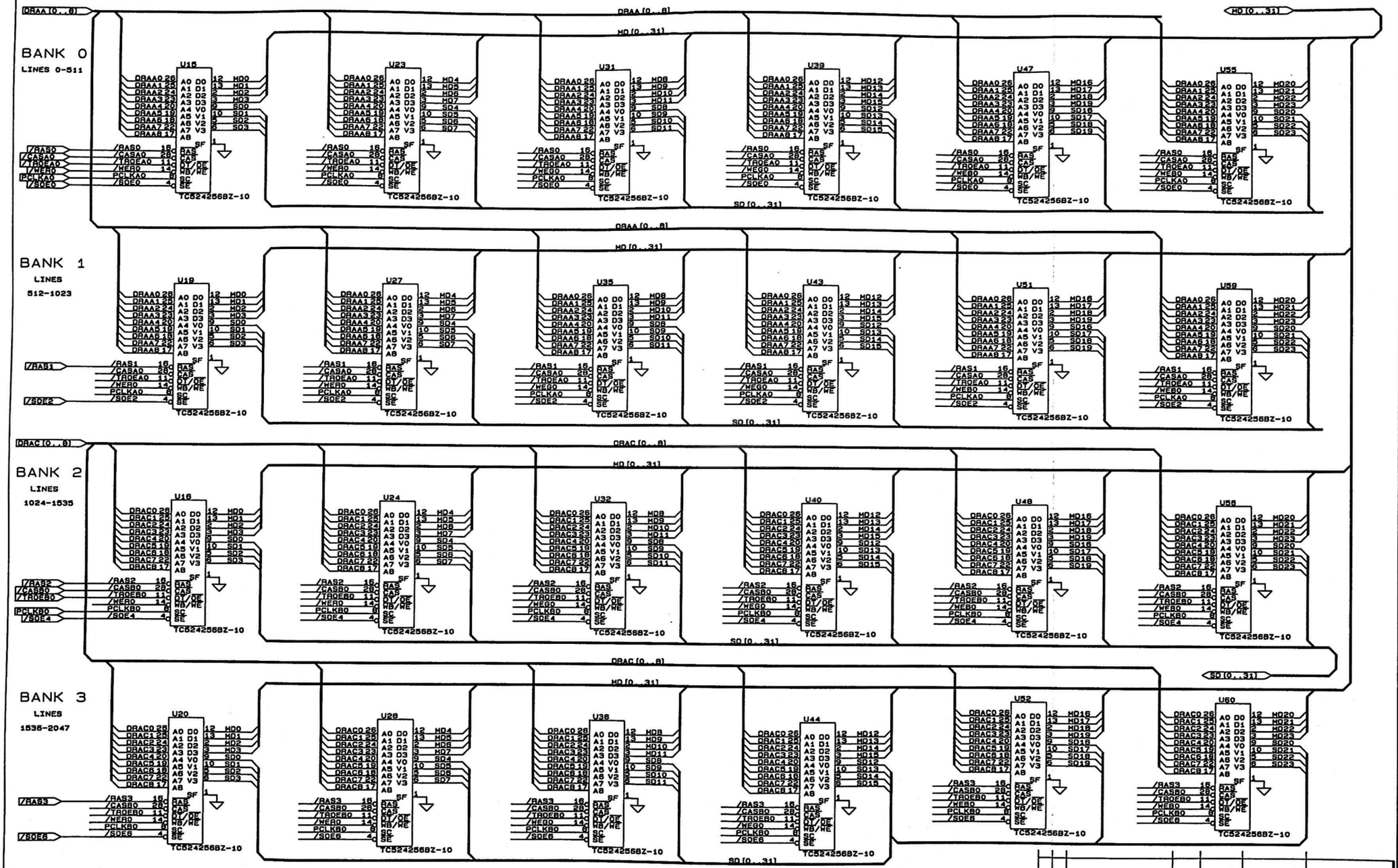

GROUP 0

PIXEL ADDRESSES 0 - 511

DATA BITS 0-23

REV.	ENGRG CHANGE NO.	DWN	CHKD.	APP'D.	MO. DAY YR.
ORIGINAL ISSUE		SH			09-27-91

CHYRON CORPORATION
5 Hub Drive
Melville, New York 11747

TITLE: FRAME BUFFER FOR INFINIT! VRAM BANKS 0-3, GROUP 0 (REV C ARTWORK)

DOCUMENT NUMBER: 2A01548 REV G

SH 10 OF 15

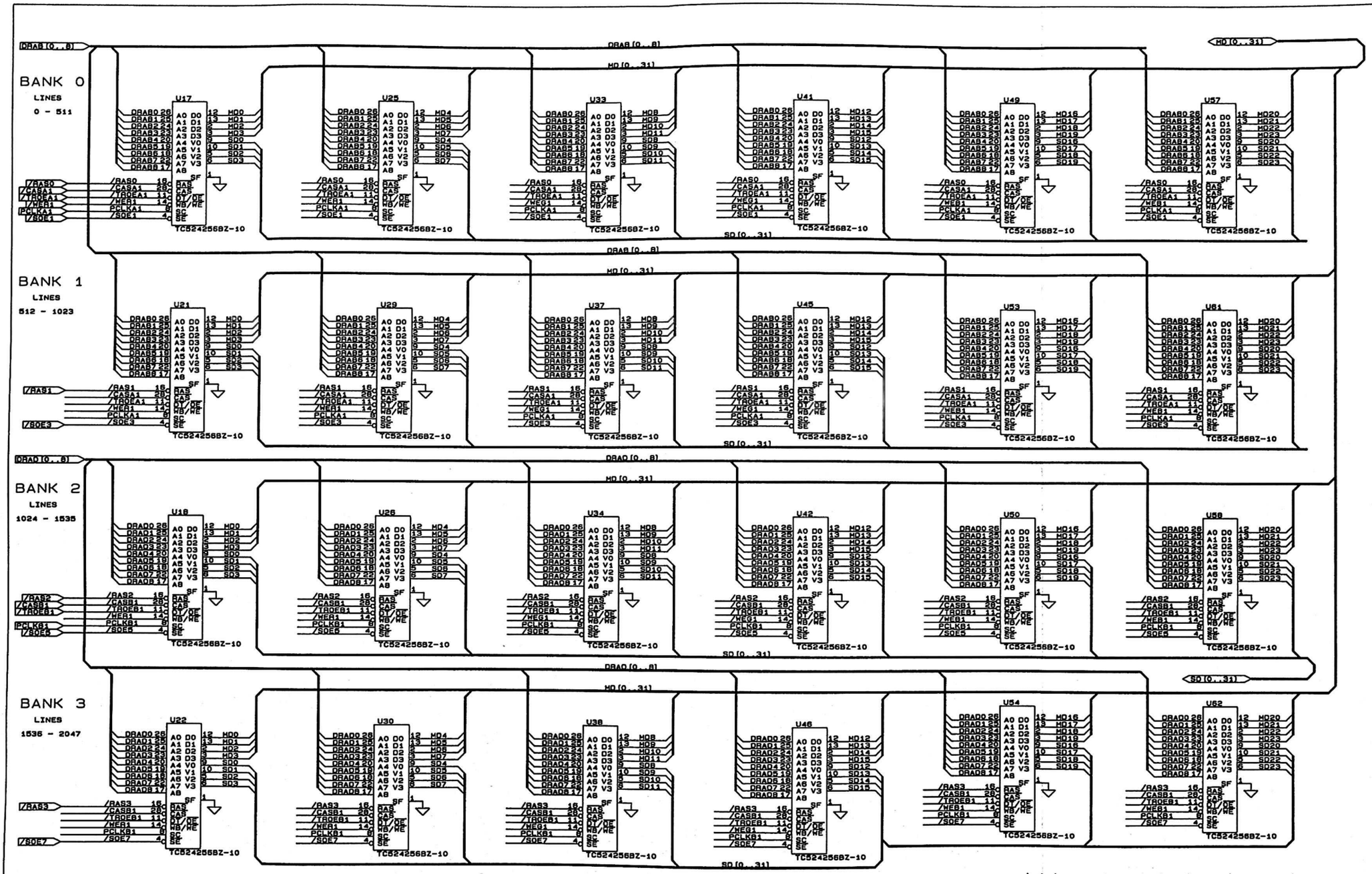

GROUP 1

PIXEL ADDRESSES 512 - 1023

DATA BITS 0-23

REV.	ENGRG CHANGE NO.	DWN	CHKD.	APP'D.	MO. DAY YR.
ORIGINAL ISSUE		SH			09-27-91

CHYRON CORPORATION
5 Hub Drive
Melville, New York 11747

TITLE: FRAME BUFFER FOR INFINIT! VRAM BANKS 0-3, GROUP 1 (REV C ARTWORK)

DOCUMENT NUMBER: 2A01548 REV G

SH 11 OF 15

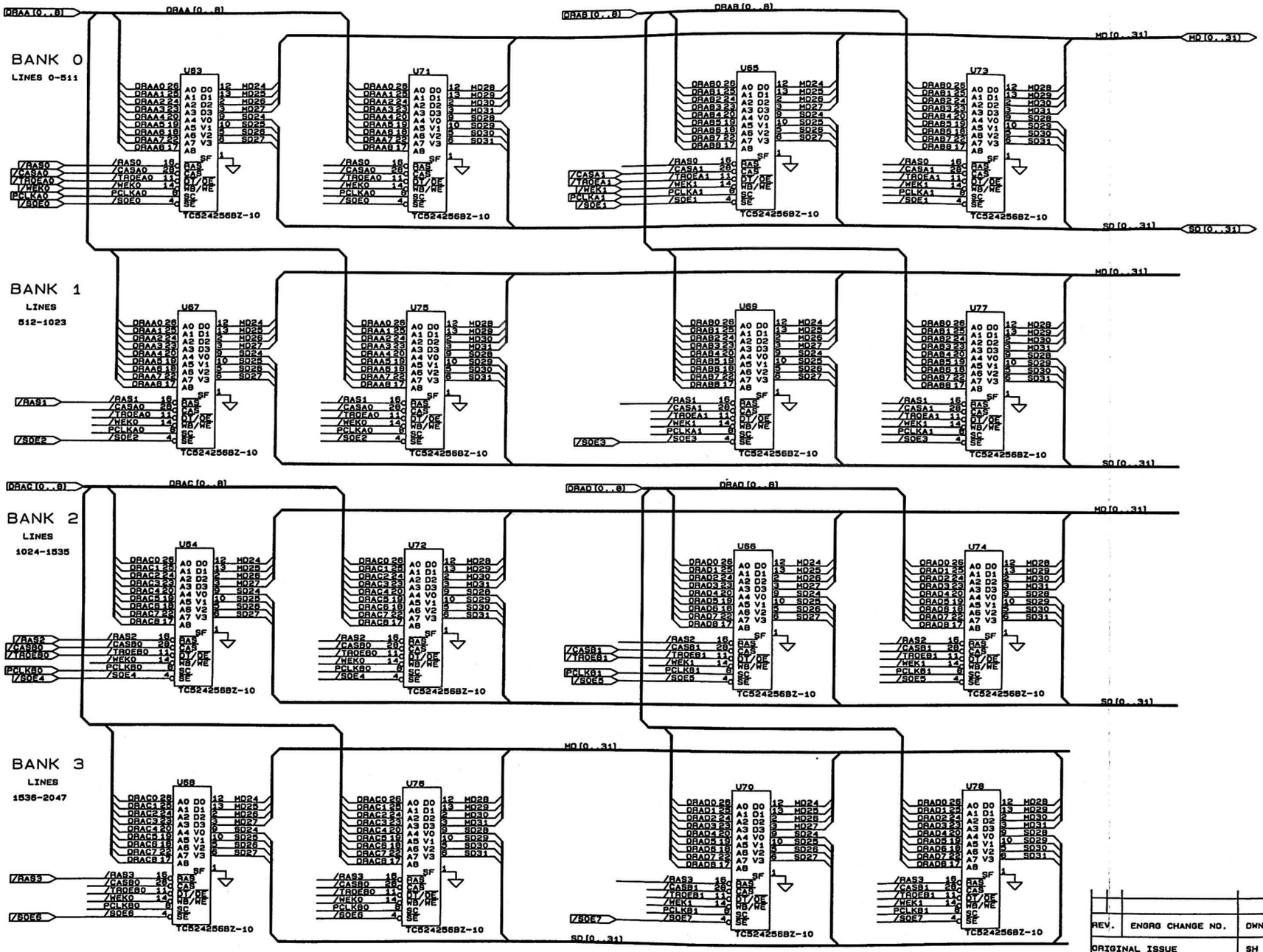

GROUP 0

PIXEL ADDRESSES 0 - 511

DATA BITS 24-31

GROUP 1

PIXEL ADDRESSES 512 - 1023

DATA BITS 24-31

REV.	ENGRG CHANGE NO.	DWN	CHKD.	APP'D.	MO. DAY YR.
ORIGINAL ISSUE		SH			09-27-91

CHYRON CORPORATION
5 Hub Drive
Melville, New York 11747

TITLE: FRAME BUFFER FOR INFINIT!
VRAM BITS 24 - 31
(REV C ARTWORK)

DOCUMENT NUMBER: 2A01548 REV 6

SH. 12 OF 15

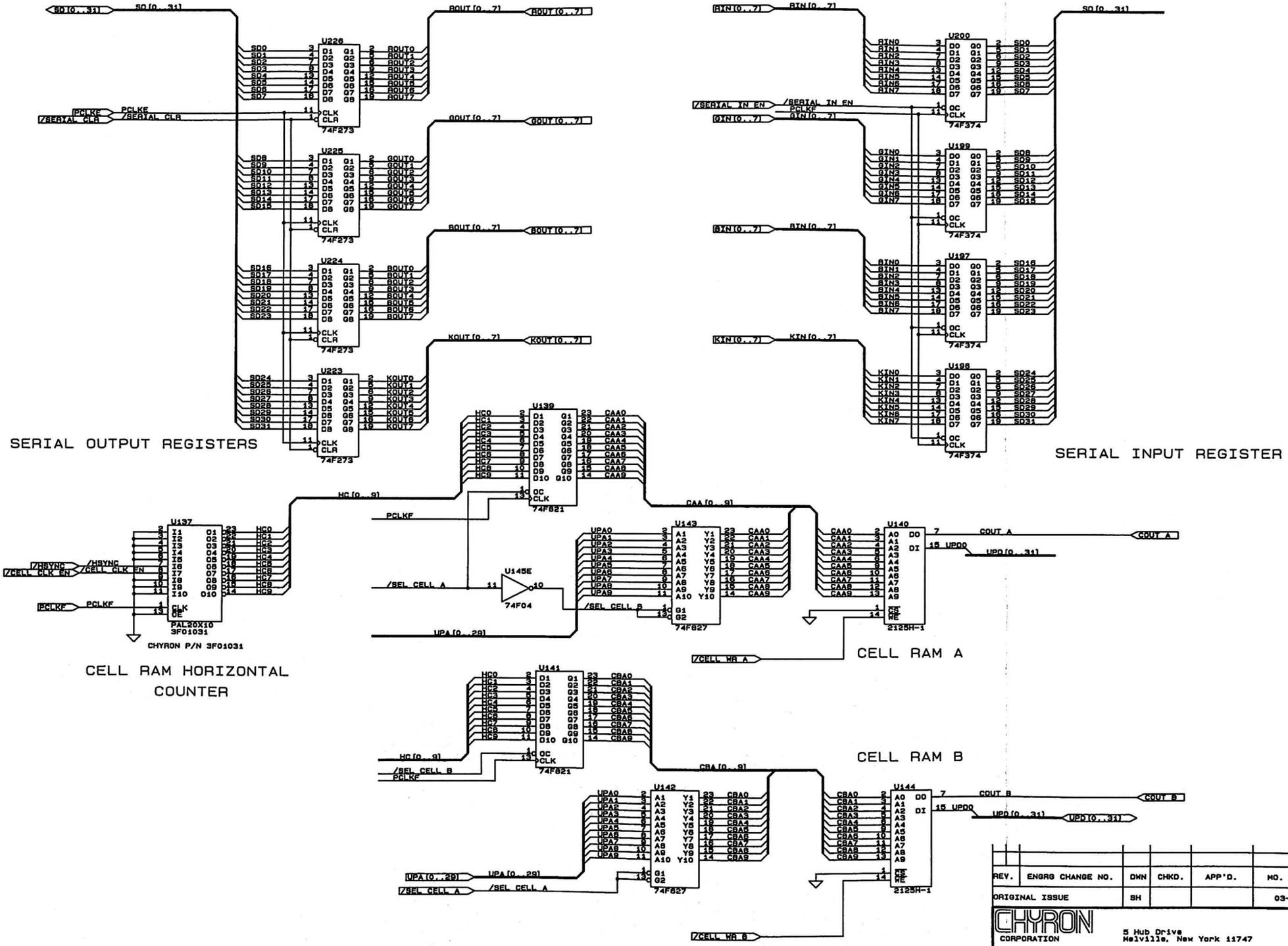

REV.	ENGRG CHANGE NO.	DWN	CHKD.	APP'D.	MO. DAY YR.
ORIGINAL ISSUE		SH			03-11-91

CHYRON CORPORATION
5 Hub Drive
Melville, New York 11747

TITLE: FRAME BUFFER FOR INFINIT!
VRAM I/O REG'S & CELL RAM
(REV C ARTWORK)

DOCUMENT NUMBER: 2A01548 REV G

SH 13 OF 15

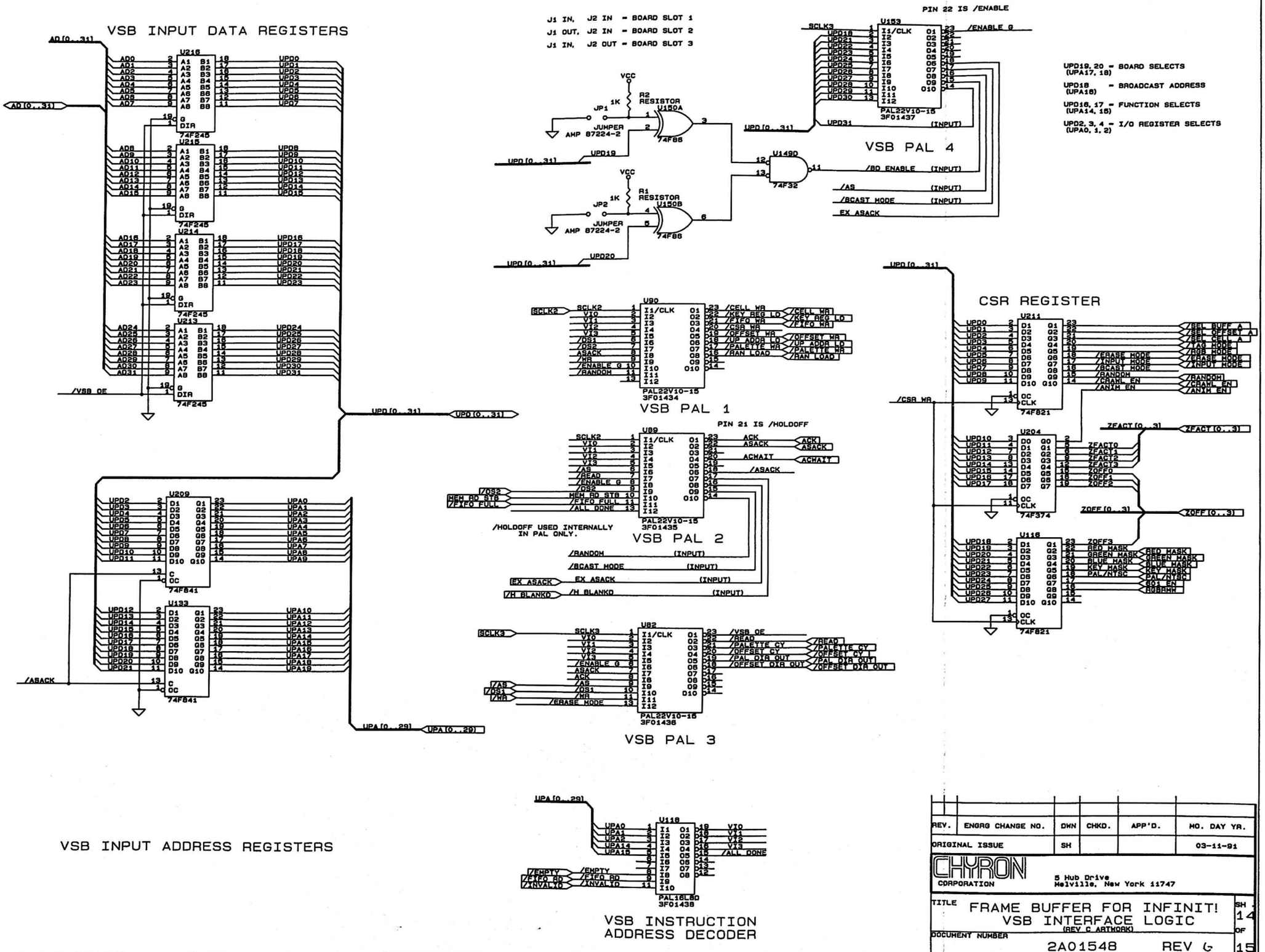

REV.	ENGRG CHANGE NO.	DWN	CHKD.	APP'D.	MO. DAY YR.
ORIGINAL ISSUE		SH			03-11-91

CHYRON CORPORATION
5 Hub Drive
Melville, New York 11747

TITLE: FRAME BUFFER FOR INFINIT!
VSB INTERFACE LOGIC
(REV C ARTWORK)

DOCUMENT NUMBER: 2A01548 REV G

SH 14 OF 15

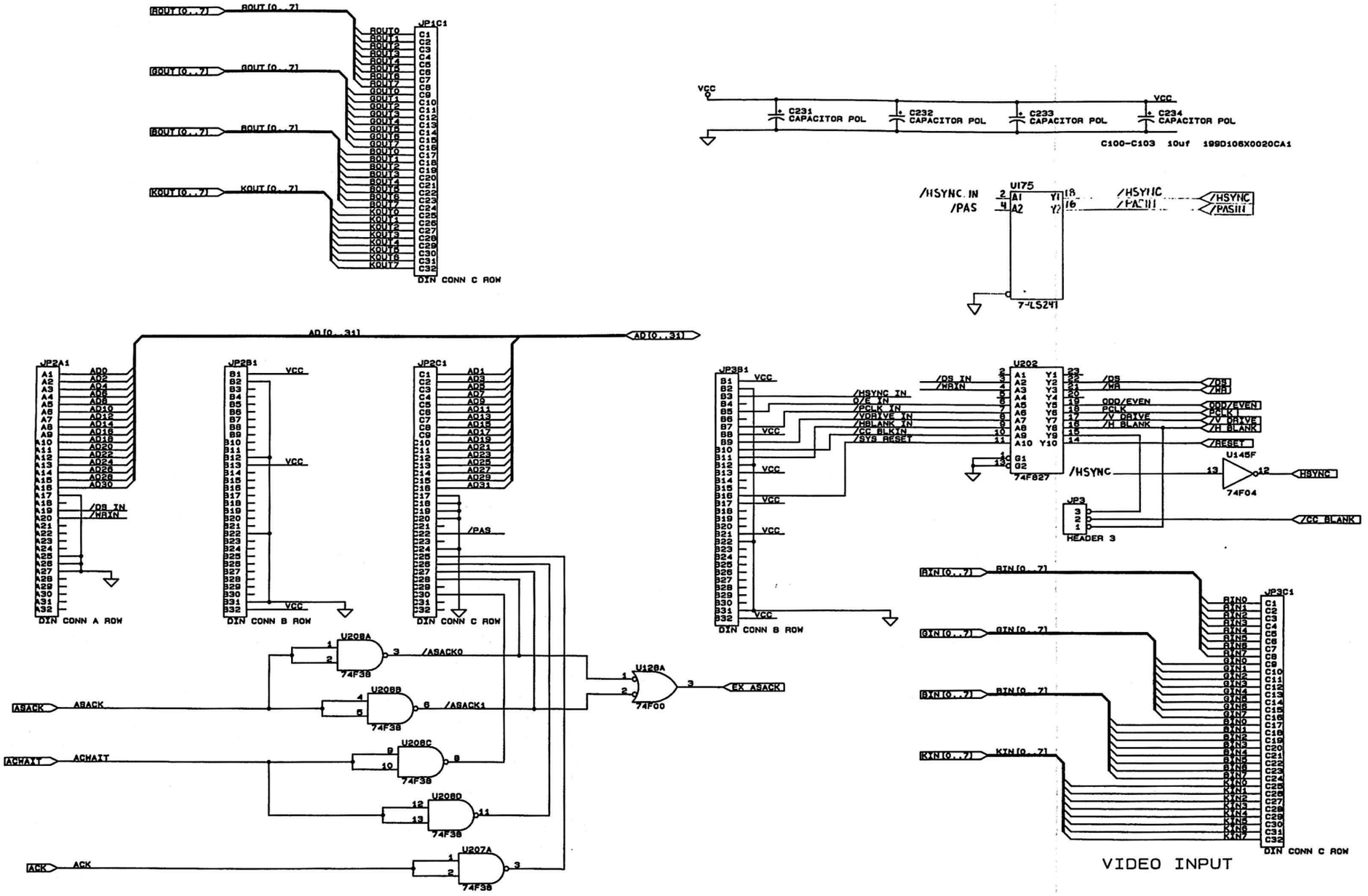
ROUT[0..7]
GOUT[0..7]
BOUT[0..7]
KOUT[0..7]
JP1C1
DIN CONN C ROW
VCC
C231 CAPACITOR POL
C232 CAPACITOR POL
C233 CAPACITOR POL
C234 CAPACITOR POL
C100-C103 10uf 199D106X0020CA1
/HSYNC IN
/PAS
U175
74LS241
/HSYNC
/PASIN
AD[0..31]
JP2A1
DIN CONN A ROW
JP2B1
DIN CONN B ROW
JP2C1
/DS IN
/WRIN
/PAS
JP3B1
U202
74F827
/HSYNC IN
O/E IN
/PCLK IN
/VDRIVE IN
/HBLANK IN
/CC BLKIN
/SYS RESET
/DS
/WR
ODD/EVEN
PCLK
/V DRIVE
/H BLANK
/RESET
U145F
74F04
HSYNC
JP3
HEADER 3
/CC BLANK
AIN[0..7]
GIN[0..7]
BIN[0..7]
KIN[0..7]
JP3C1
U208A
U208B
U208C
U208D
74F38
U128A
74F00
/ASACK0
/ASACK1
EX ASACK
ASACK
ACHAIT
ACK
U207A
VIDEO INPUT
REV. ENGRG CHANGE NO. DWN CHKD. APP'D. NO. DAY YR.
ORIGINAL ISSUE SH 03-11-91
CHYRON CORPORATION
5 Hub Drive
Melville, New York 11747
TITLE
FRAME BUFFER FOR INFINIT!
DIN CONNECTORS ET AL
(REV C ARTWORK)
DOCUMENT NUMBER
2A01548 REV 6
SH 15 OF 15

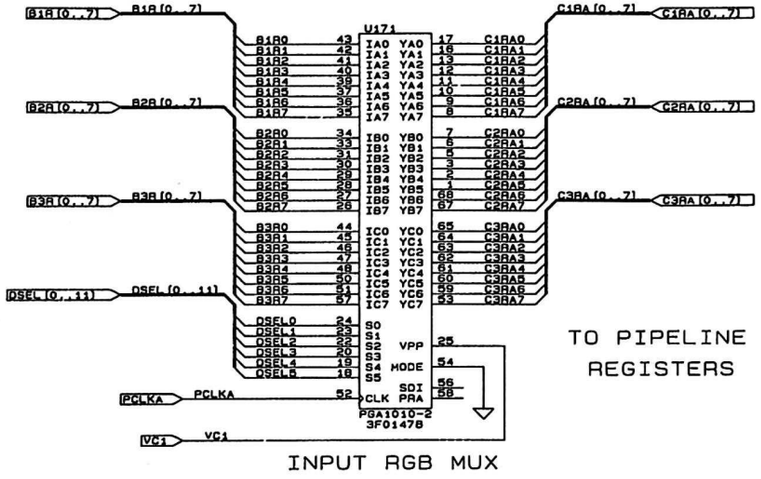

INPUT RGB MUX

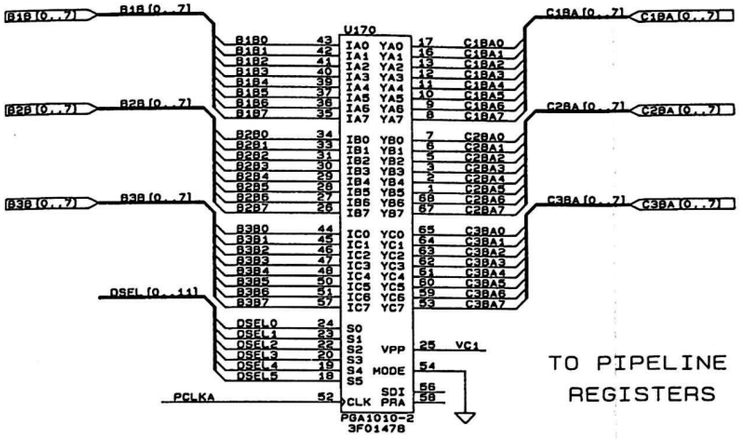

INPUT RGB MUX

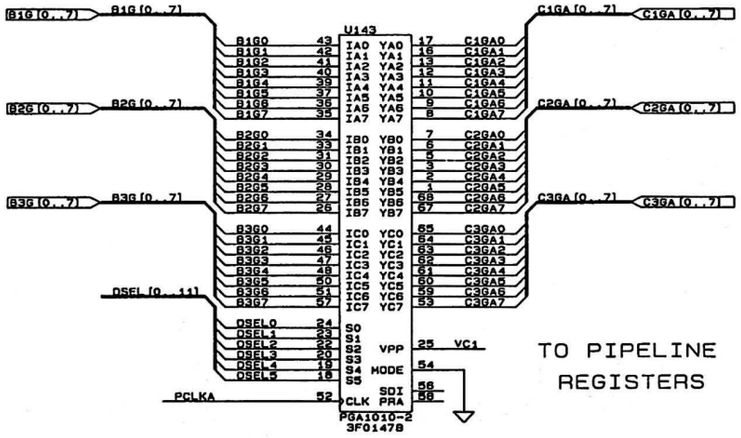

INPUT RGB MUX

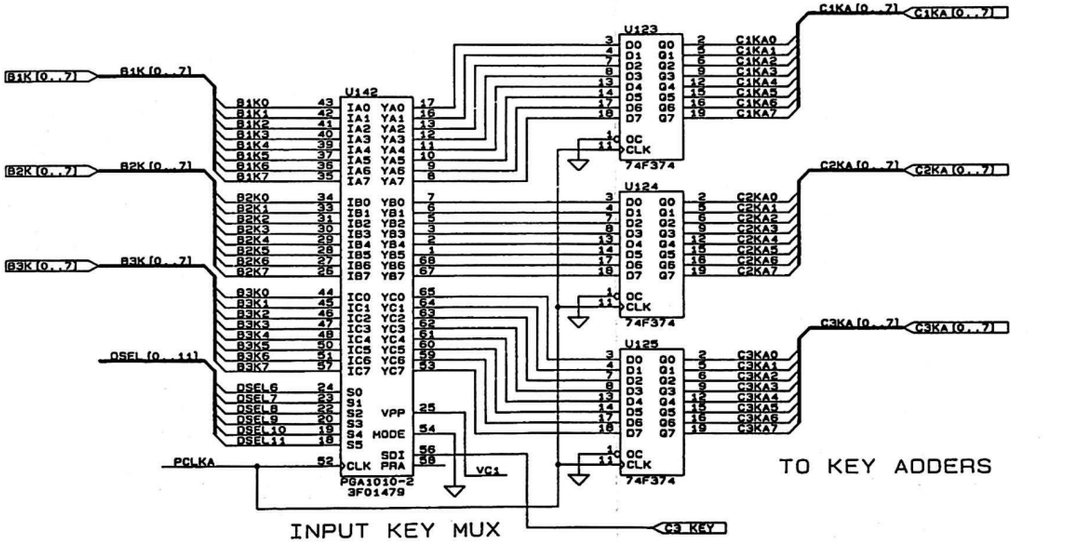

INPUT KEY MUX

NOTE: PROBE SECURITY FUSE MUST BE PROGRAMMED FOR THIS PART.

NOTE THAT INPUT RGB MUX AND INPUT KEY MUX SHARE PINOUTS, BUT HAVE DIFFERENT INTERNAL PROGRAMMING. AS A RESULT, THEY WILL HAVE DIFFERENT "3F0" NUMBERS ASSIGNED.

REV.	ENGRG CHANGE NO.	DWN	CHKD.	APP'D.	MO. DAY YR.
ORIGINAL ISSUE		SH			04-19-90

CHYRON CORPORATION
5 Hub Drive
Melville, New York 11747

TITLE: MIX & EFFECTS INPUT DATA MUXES

SH. 1 OF 16

DOCUMENT NUMBER: 2A01387 REV E

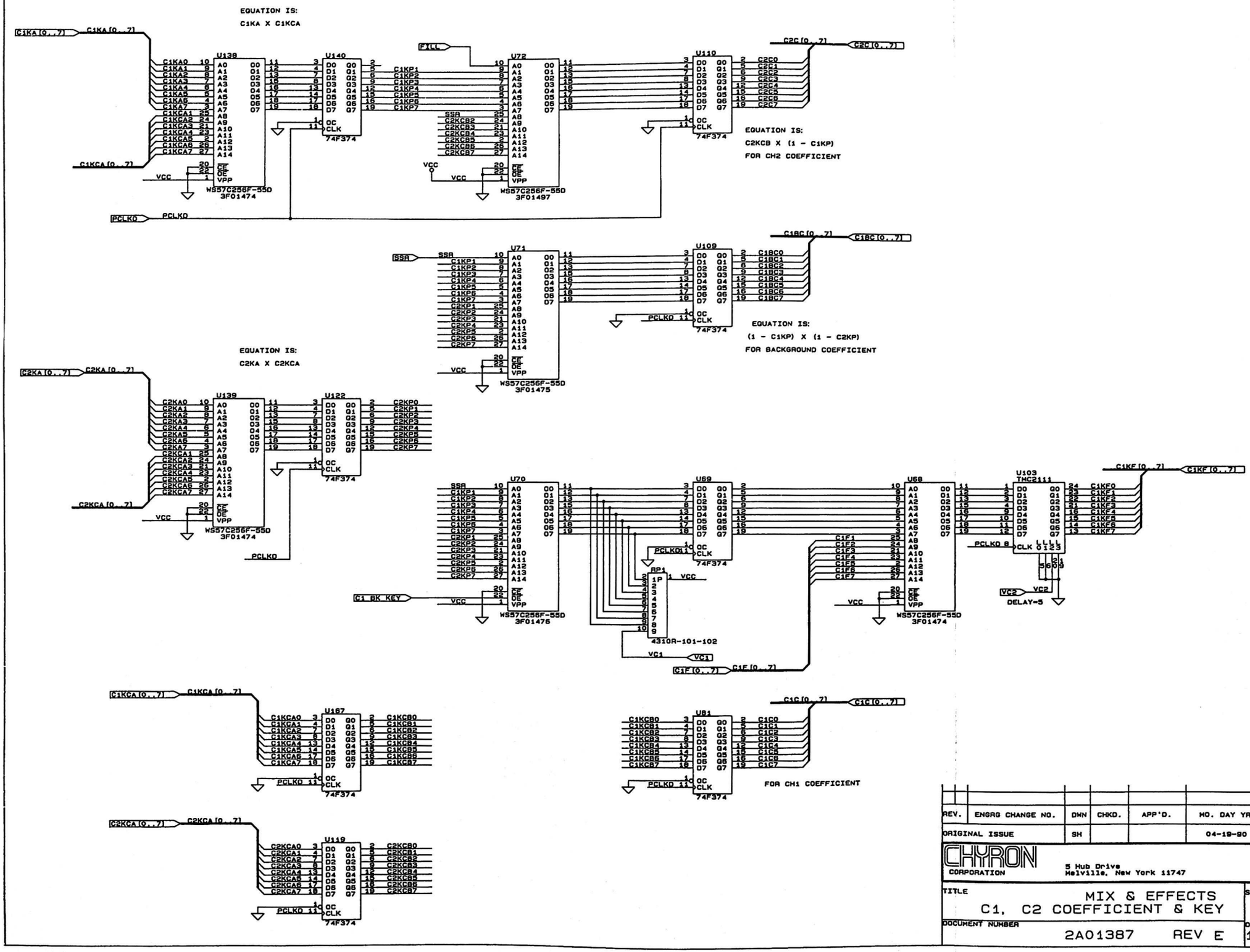

REV.	ENGRG CHANGE NO.	DWN	CHKD.	APP'D.	MO. DAY YR.
ORIGINAL ISSUE		SH			04-19-90

CHYRON CORPORATION
5 Hub Drive
Melville, New York 11747

TITLE
MIX & EFFECTS
C1, C2 COEFFICIENT & KEY

SH. 2 OF 16

DOCUMENT NUMBER
2A01387 REV E

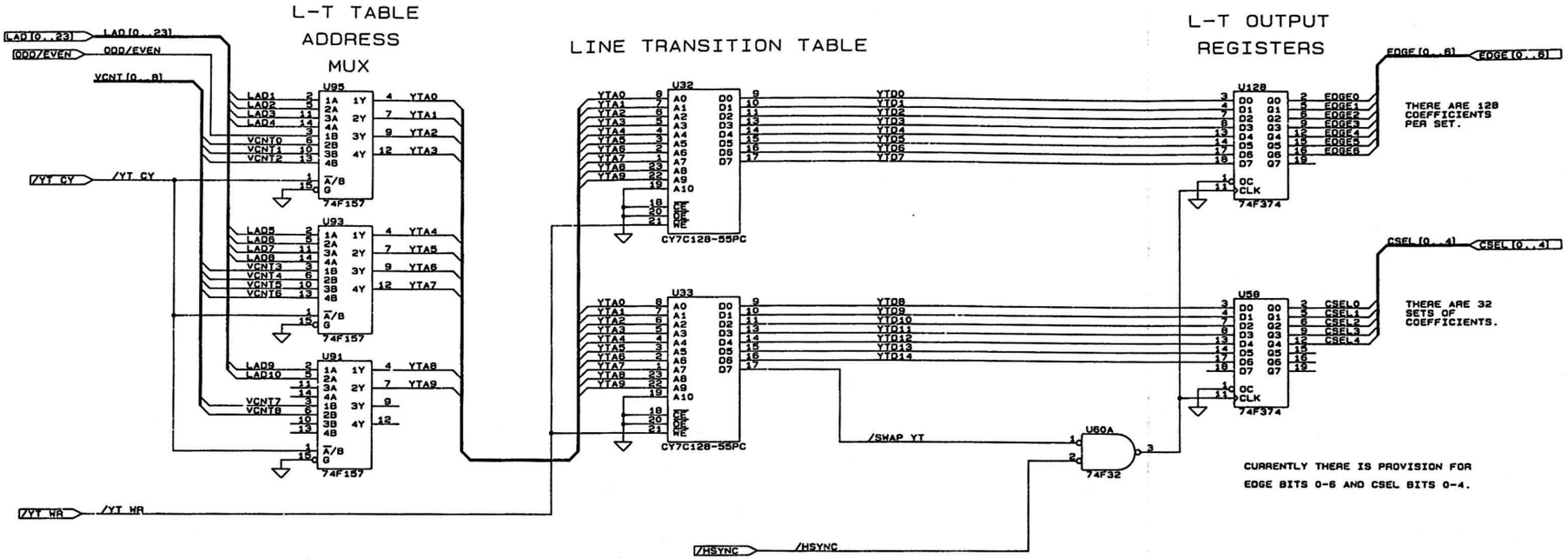

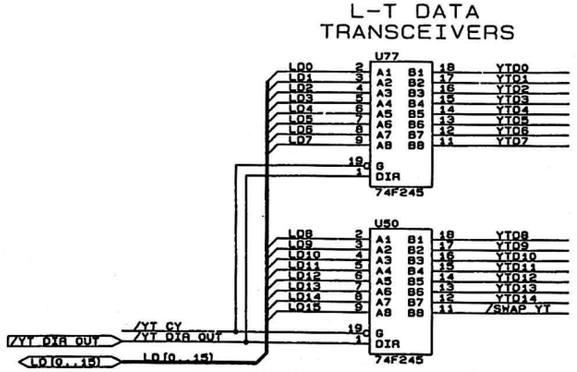

NOTE:

68010 ACCESSES TO THE Y-T TABLE MUST BE LIMITED TO V BLANKING TIME. THEREFORE NO NEED FOR DOUBLE BUFFERING.

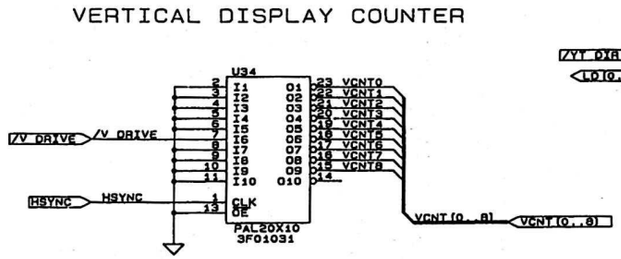

9 BITS FROM VCNT PLUS ODD/EVEN GIVE 1024 LINE ADDRESSABILITY

REV.	ENGRG CHANGE NO.	DWN	CHKD.	APP'D.	MO. DAY YR.
ORIGINAL ISSUE		SH			04-19-90

CHYRON CORPORATION
5 Hub Drive
Melville, New York 11747

TITLE: MIX & EFFECTS LINE TRANSITION TABLE

DOCUMENT NUMBER: 2A01387 REV =

SH. 3 OF 16

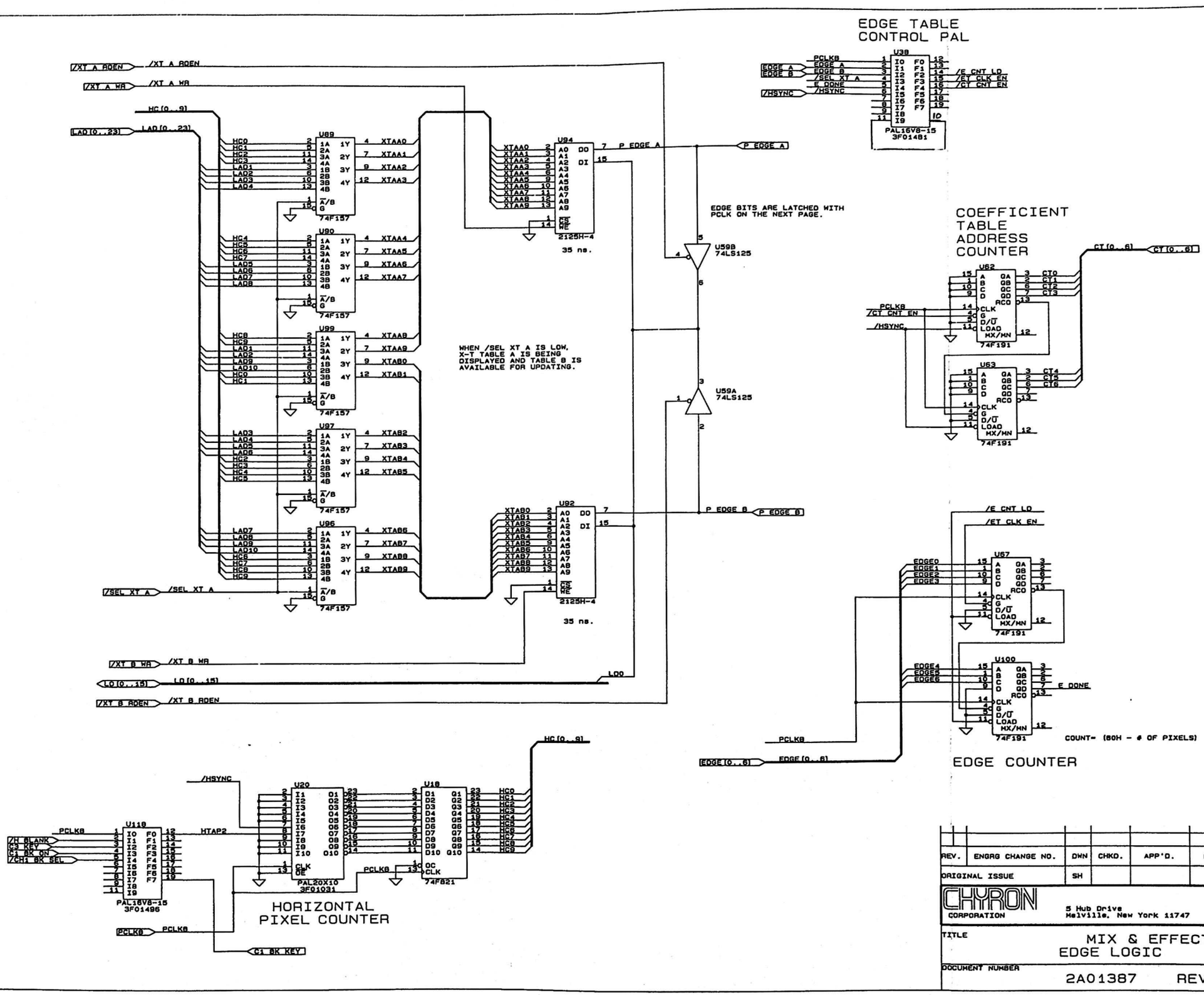

REV.	ENGRG CHANGE NO.	DWN	CHKD.	APP'D.	MO. DAY YR.
ORIGINAL ISSUE		SH			04-19-90

CHYRON CORPORATION
5 Hub Drive
Melville, New York 11747

TITLE: MIX & EFFECTS EDGE LOGIC

SH. 4 OF 16

DOCUMENT NUMBER: 2A01387 REV E

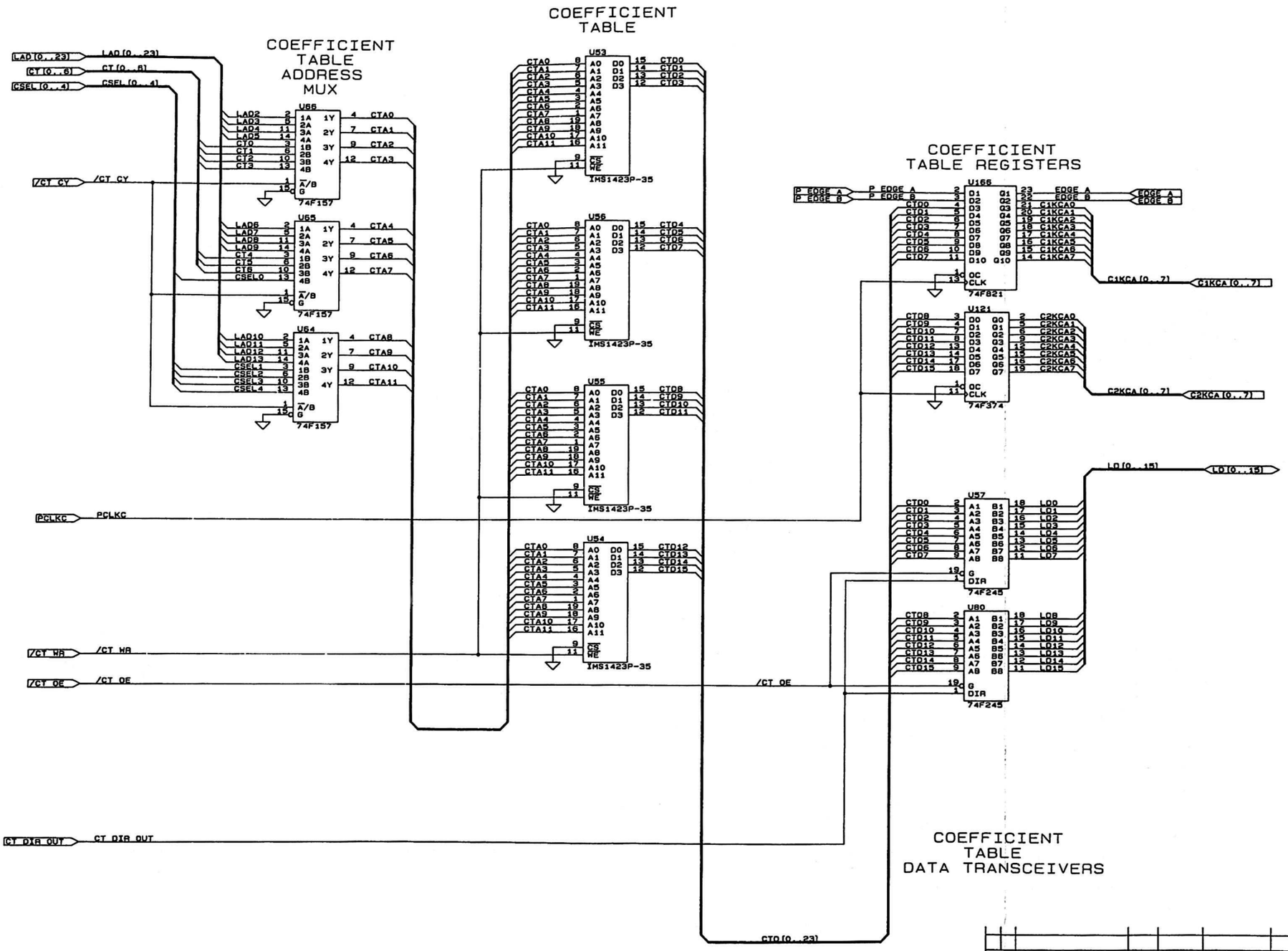

REV.	ENGRG CHANGE NO.	DWN	CHKD.	APP'D.	MO. DAY YR.
ORIGINAL ISSUE		SH			04-19-90

CHYRON CORPORATION
5 Hub Drive
Melville, New York 11747

TITLE: MIX & EFFECTS COEFFICIENT TABLE

DOCUMENT NUMBER: 2A01387 REV

SH. 5 OF 16

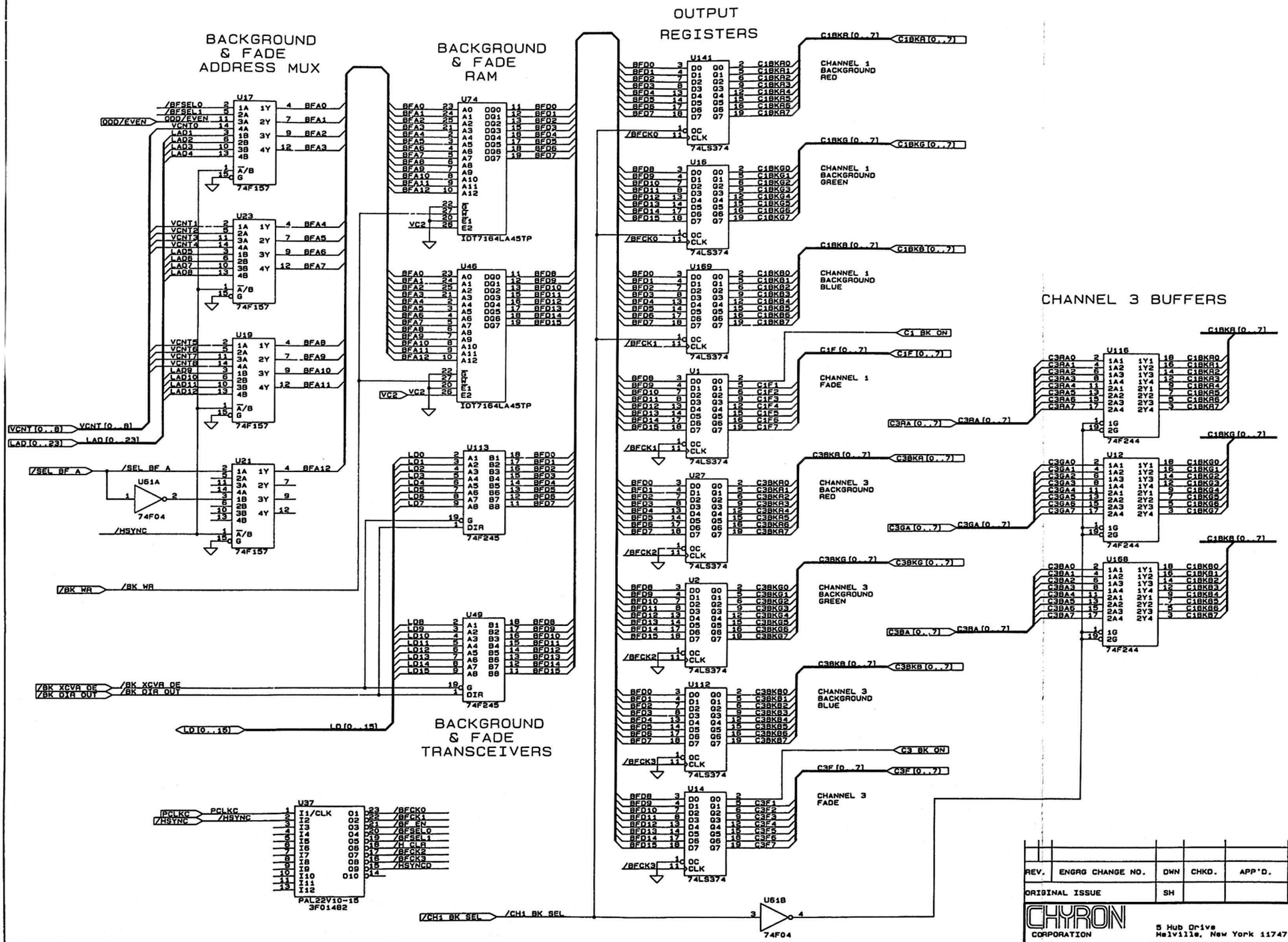

REV.	ENGRG CHANGE NO.	DWN	CHKD.	APP'D.	MO. DAY YR.
ORIGINAL ISSUE		SH			04-19-90

CHYRON CORPORATION
5 Hub Drive
Melville, New York 11747

TITLE
MIX & EFFECTS
BACKGROUND & FADE TABLES

SH. 6 OF 16

DOCUMENT NUMBER
2A01387 REV E

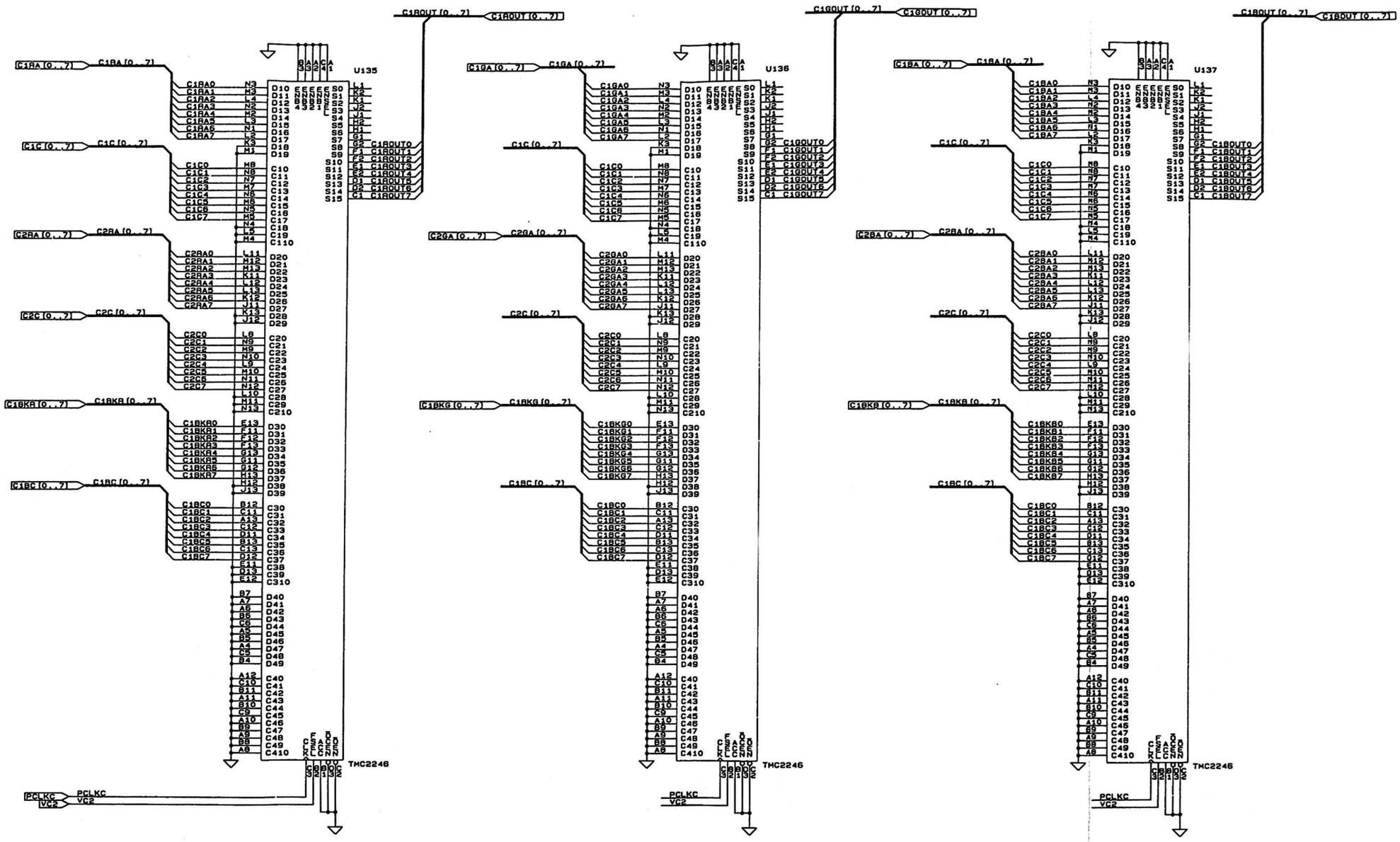

REV.	ENGRG CHANGE NO.	DWN	CHKD.	APP'D.	MO. DAY YR.
ORIGINAL ISSUE		SH			04-19-90

CHYRON CORPORATION
5 Hub Drive
Melville, New York 11747

TITLE: MIX & EFFECTS
CH1 & CH2 VIDEO MIXERS

SH. 7 OF 16

DOCUMENT NUMBER: 2A01387 REV L.

CH3 MULTIPLIER PROMS

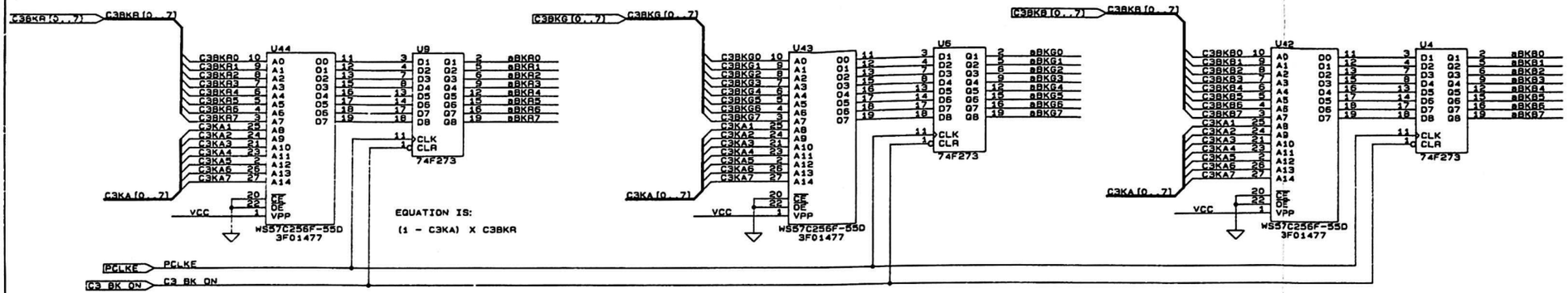

CH3 FADE PROM

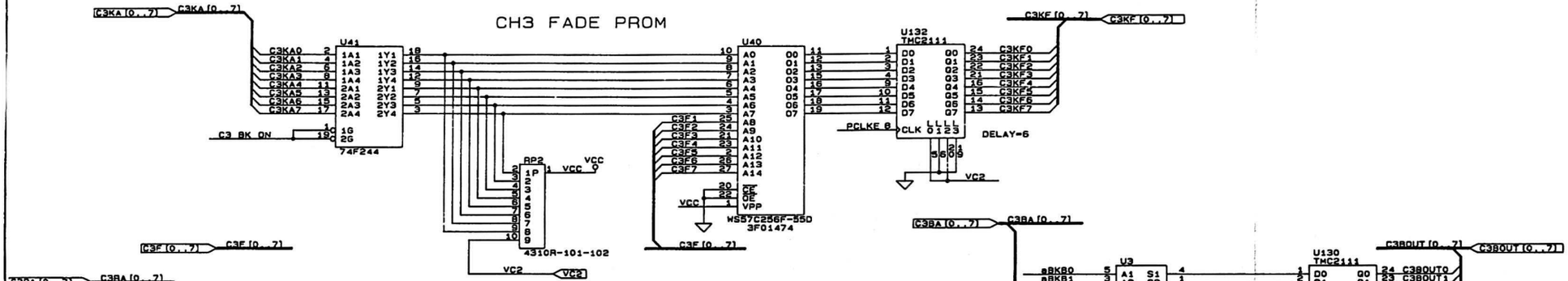

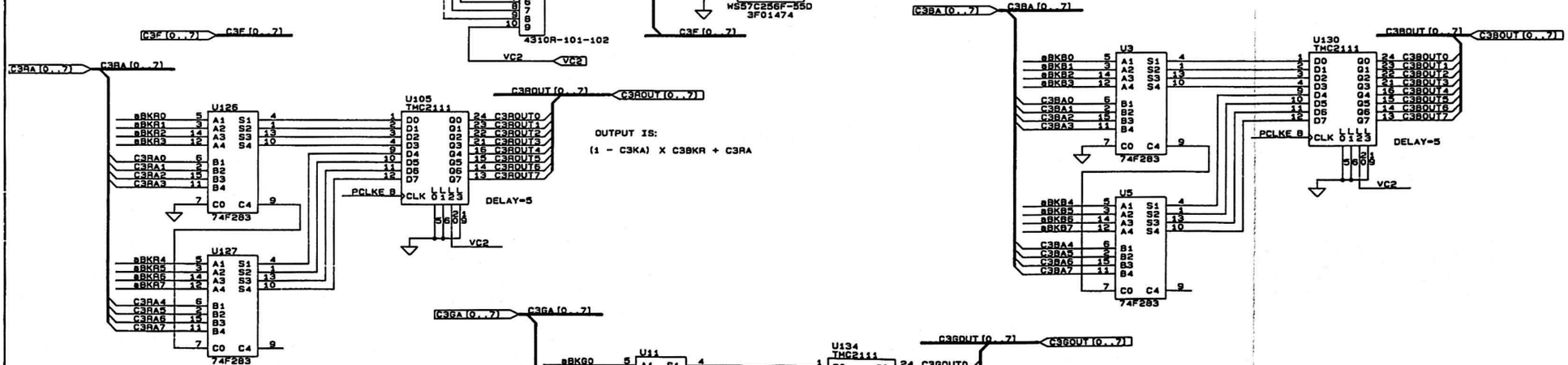

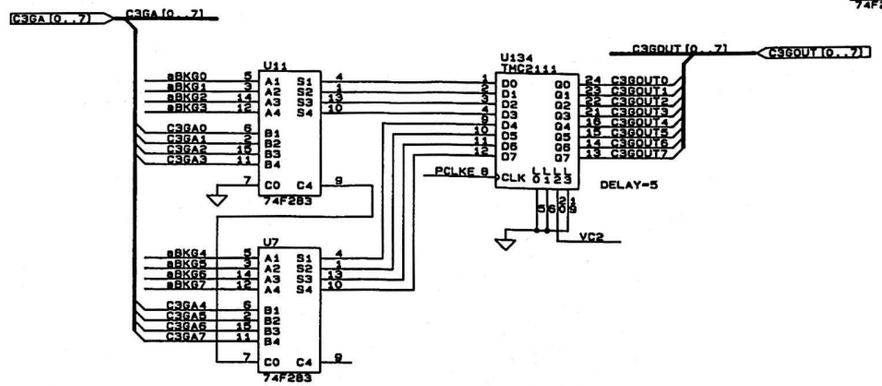

REV.	ENGRG CHANGE NO.	DWN	CHKD.	APP'D.	MO. DAY YR.
ORIGINAL ISSUE		SH			04-19-90

CHYRON CORPORATION
5 Hub Drive
Melville, New York 11747

TITLE
MIX & EFFECTS
CHANNEL 3 MIXER

SH. 8

DOCUMENT NUMBER
2A01387 · REV E

OF 16

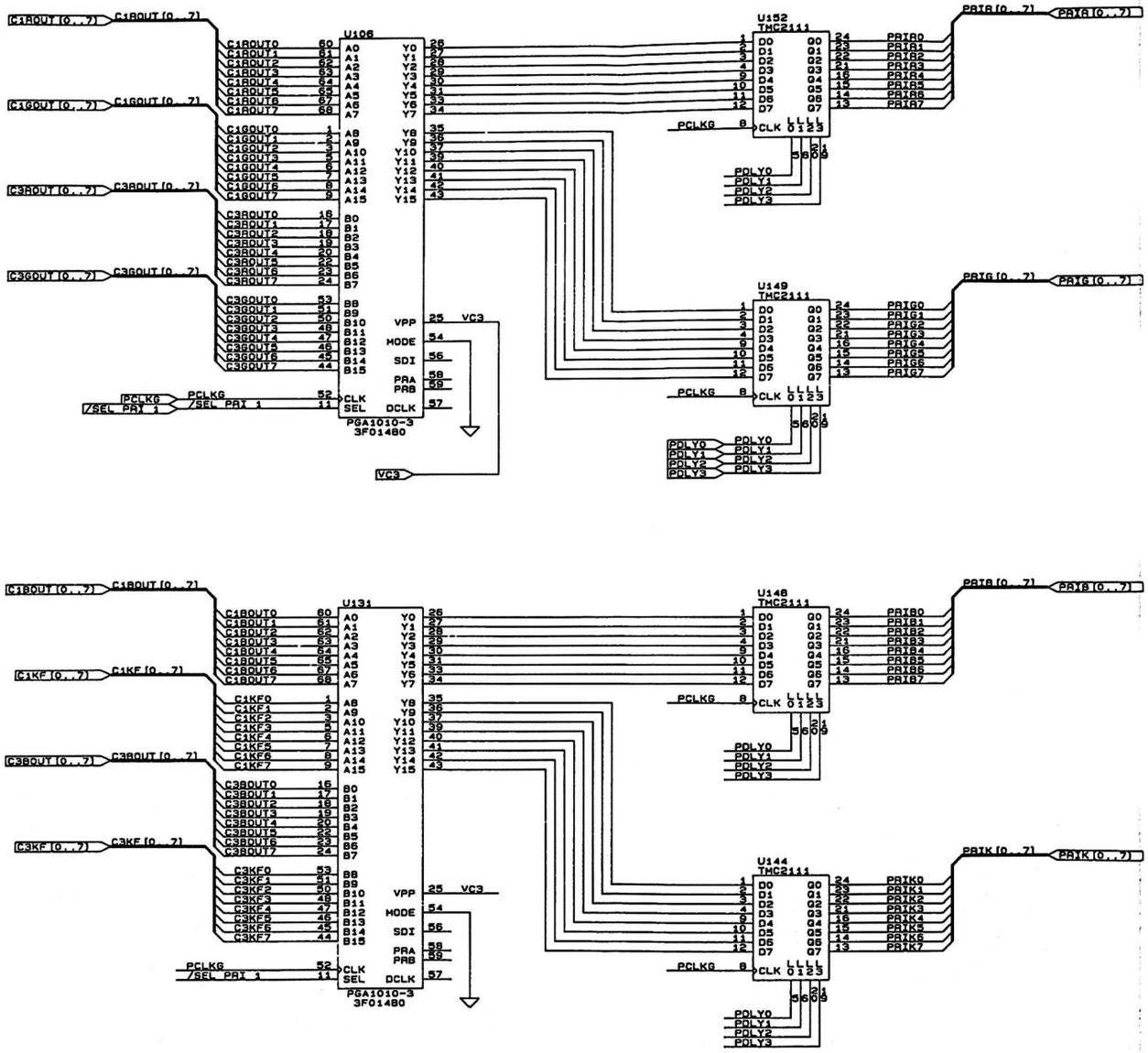

REV.	ENGRG CHANGE NO.	DWN	CHKD.	APP'D.	MO. DAY YR.
ORIGINAL ISSUE		SH			04-19-90

CHYRON CORPORATION
5 Hub Drive
Melville, New York 11747

TITLE: MIX & EFFECTS
PRIMARY CHANNEL OUTPUT MUX

SH. 9 OF 16

DOCUMENT NUMBER 2A01387 REV E

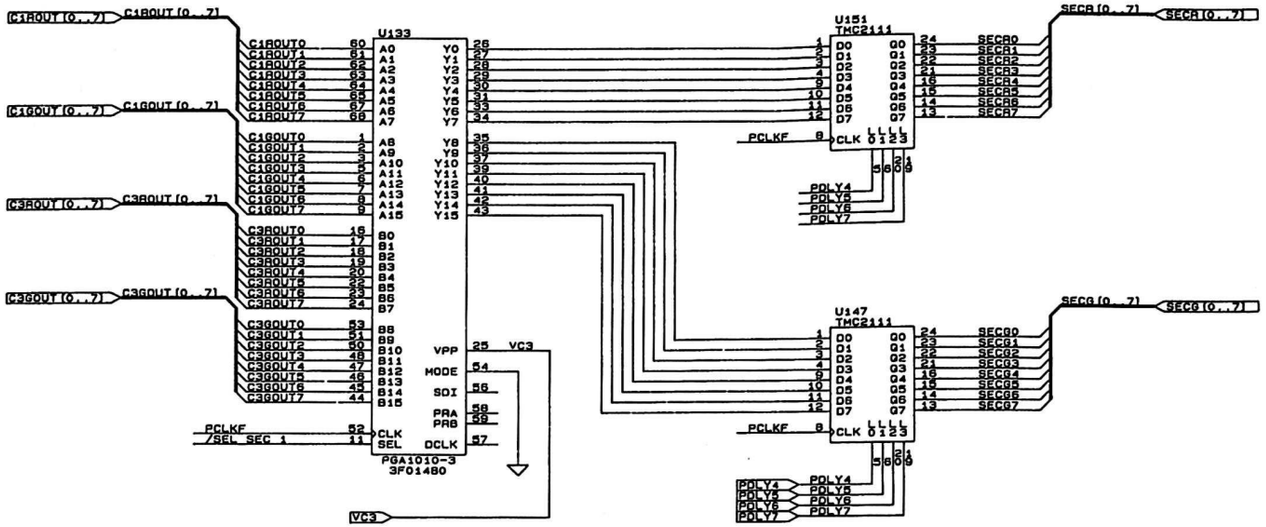

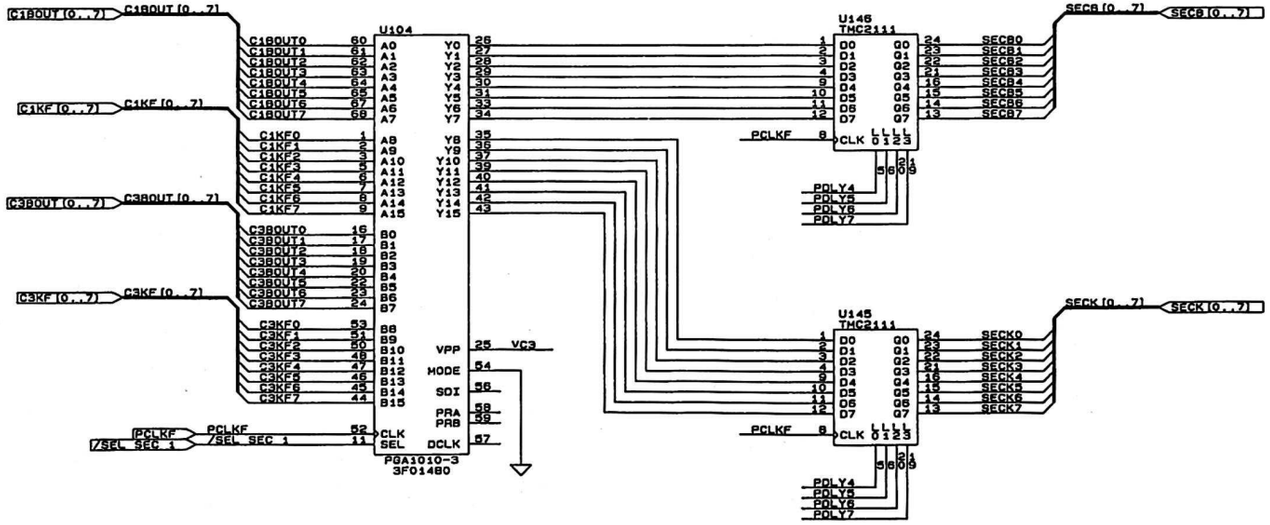

REV.	ENGRG CHANGE NO.	DWN	CHKD.	APP'D.	MO. DAY YR.
ORIGINAL ISSUE		SH			04-19-90

CHYRON CORPORATION
5 Hub Drive
Melville, New York 11747

TITLE
MIX & EFFECTS
SECONDARY CHANNEL OUTPUT MUX

SH. 10 OF 16

DOCUMENT NUMBER
2A01387 . REV E

LAD17-LAD23 SELECT THIS LOGIC.
LAD14-LAD16 SELECT THE FUNCTION.

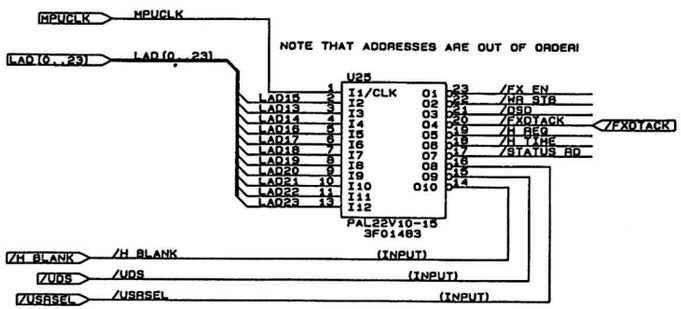

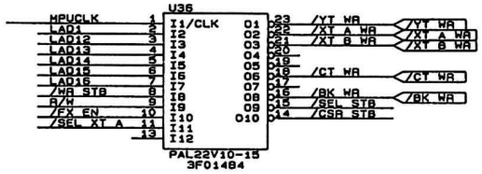

THOUGH SYSCLK IS INCLUDED,
ALL OUTPUTS ARE COMBINATORIAL.

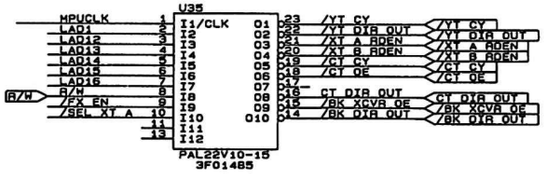

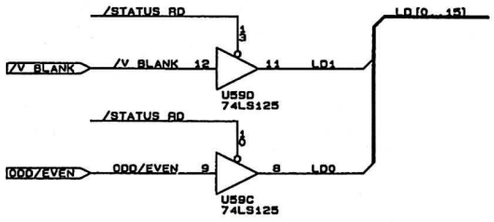

VIDEO STATUS REGISTER

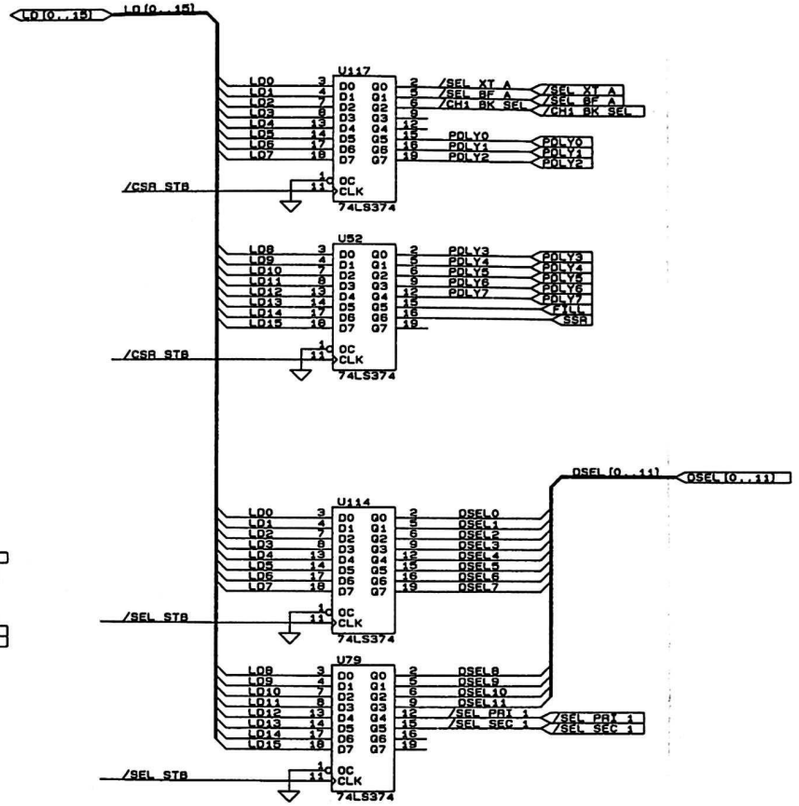

REV.	ENGRG CHANGE NO.	DWN	CHKD.	APP'D.	MO. DAY YR.
ORIGINAL ISSUE		SH			04-19-90

CHYRON CORPORATION
5 Hub Drive
Melville, New York 11747

TITLE: MIX & EFFECTS CPU INTERFACE

DOCUMENT NUMBER: 2A01387 REV E

SH. 11 OF 16

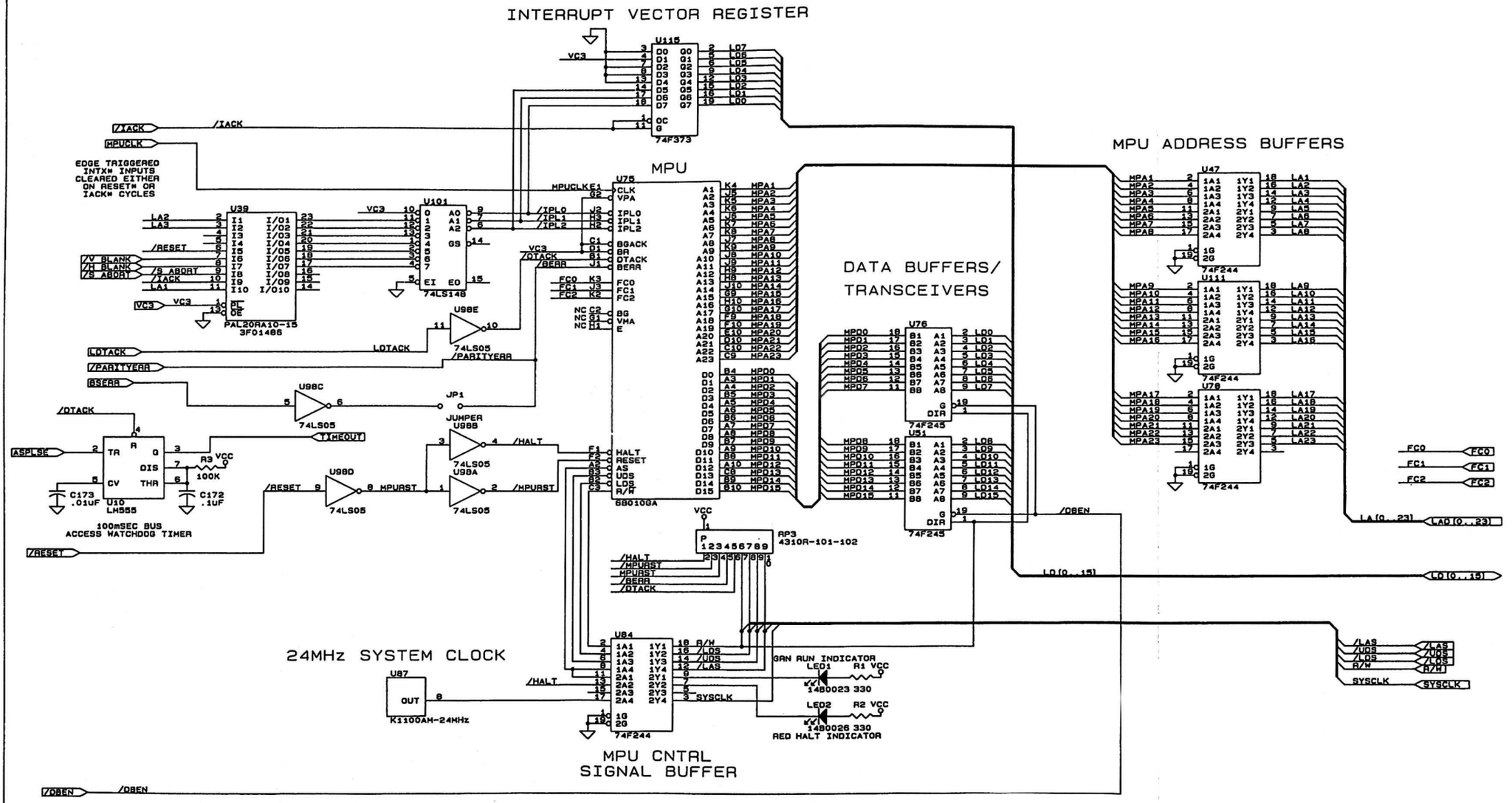

REV.	ENGRG CHANGE NO.	DWN	CHKD.	APP'D.	MO. DAY YR.
ORIGINAL ISSUE		SH			04-19-90

CHYRON CORPORATION
5 Hub Drive
Melville, New York 11747

TITLE: MIX & EFFECTS
MPU & DRIVERS

SH. 12 OF 16

DOCUMENT NUMBER: 2A01387 REV E

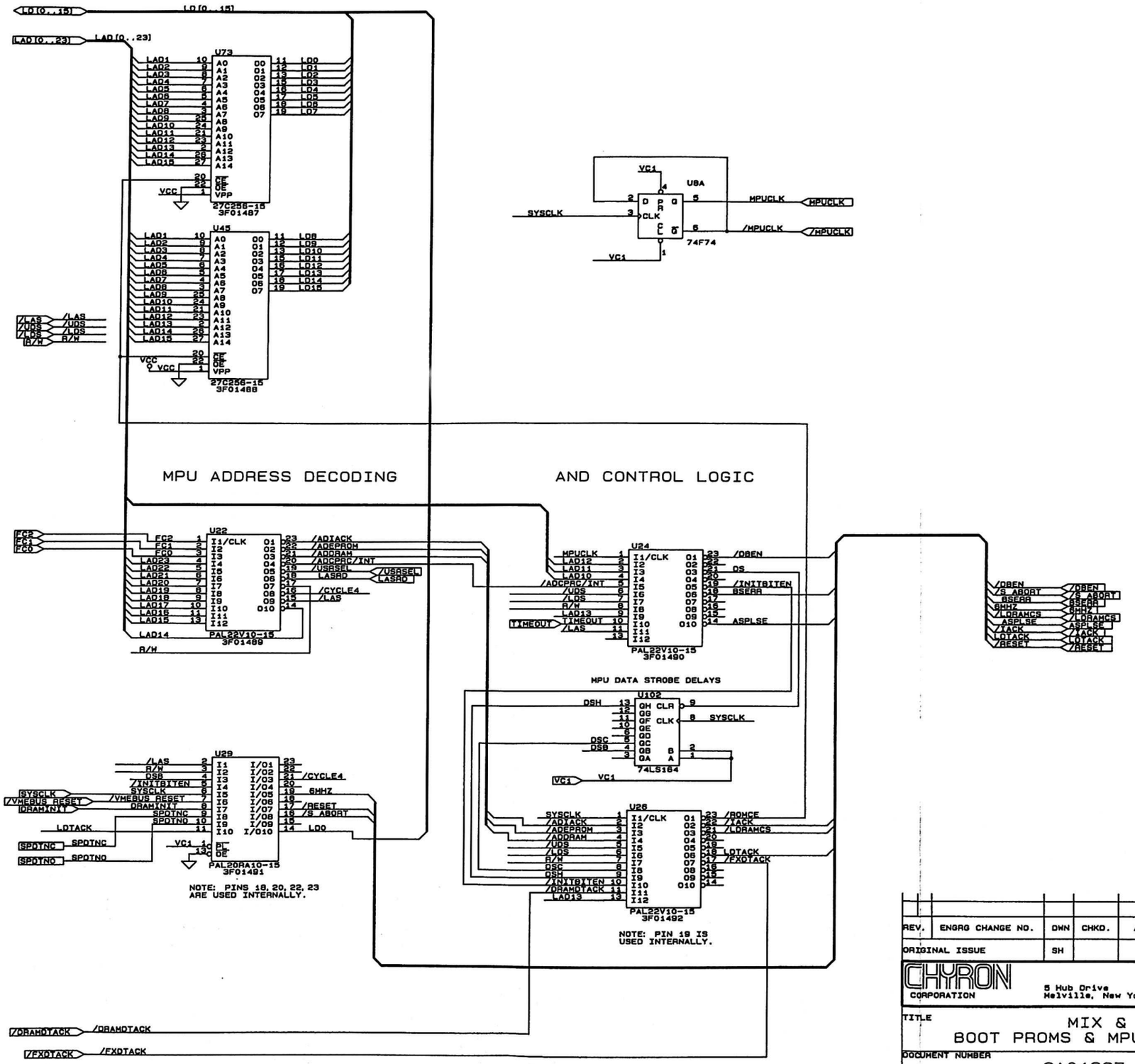

REV.	ENGRG CHANGE NO.	DWN	CHKD.	APP'D.	MO. DAY YR.
ORIGINAL ISSUE		SH			07-12-90

CHYRON CORPORATION
5 Hub Drive
Melville, New York 11747

TITLE: MIX & EFFECTS BOOT PROMS & MPU CONTROL

SH. 13

DOCUMENT NUMBER: 2A01387 REV E

OF 16

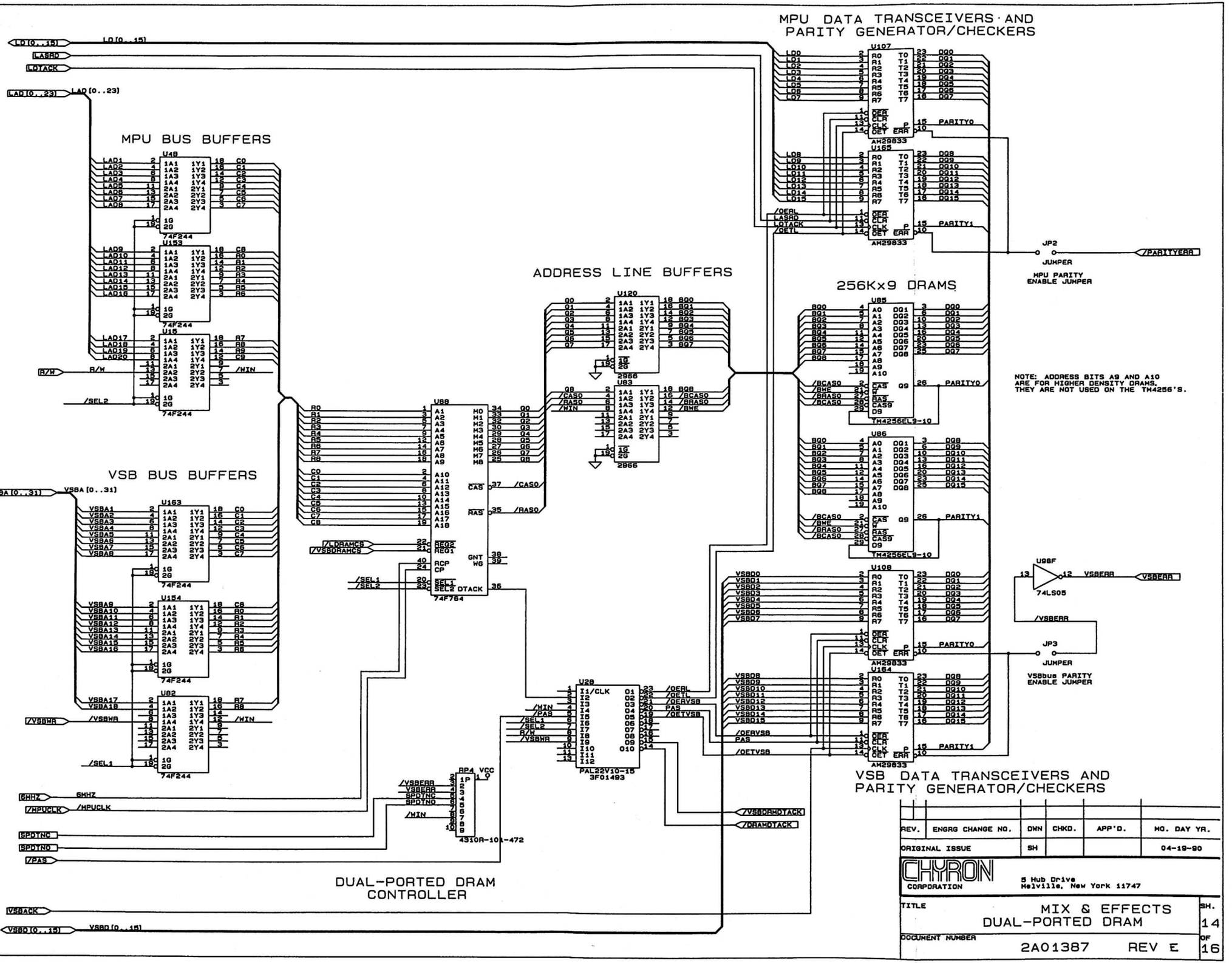

REV.	ENGRG CHANGE NO.	DWN	CHKD.	APP'D.	MO. DAY YR.
ORIGINAL ISSUE		SH			04-19-90

CHYRON CORPORATION
5 Hub Drive
Melville, New York 11747

TITLE: MIX & EFFECTS DUAL-PORTED DRAM

SH. 14 OF 16

DOCUMENT NUMBER: 2A01387 REV E

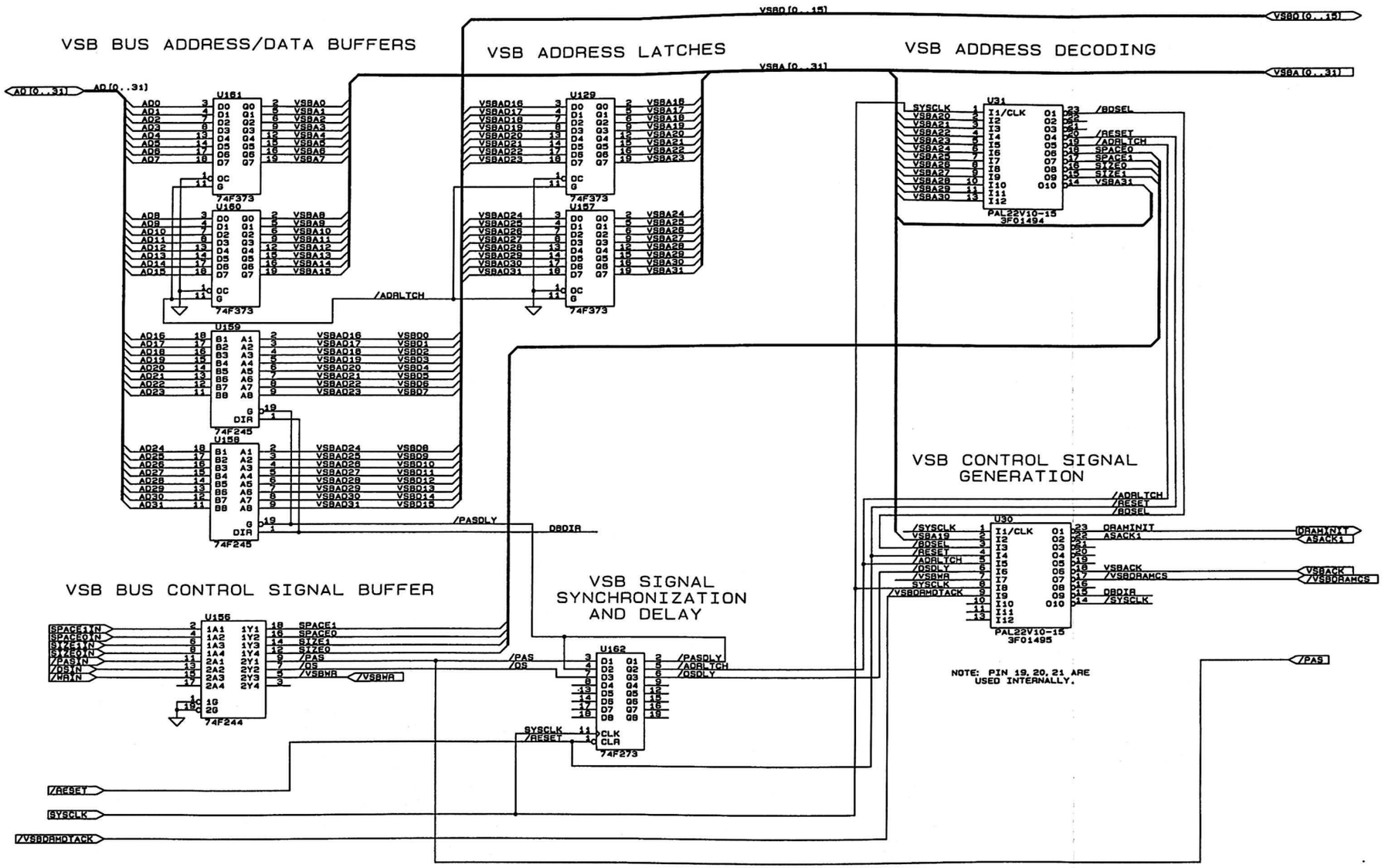

REV.	ENGRG CHANGE NO.	DWN	CHKD.	APP'D.	MO. DAY YR.
ORIGINAL ISSUE		SH			04-19-90

CHYRON CORPORATION
5 Hub Drive
Melville, New York 11747

TITLE: MIX & EFFECTS VSB INTERFACE

DOCUMENT NUMBER: 2A01387 REV E

SH. 15 OF 16

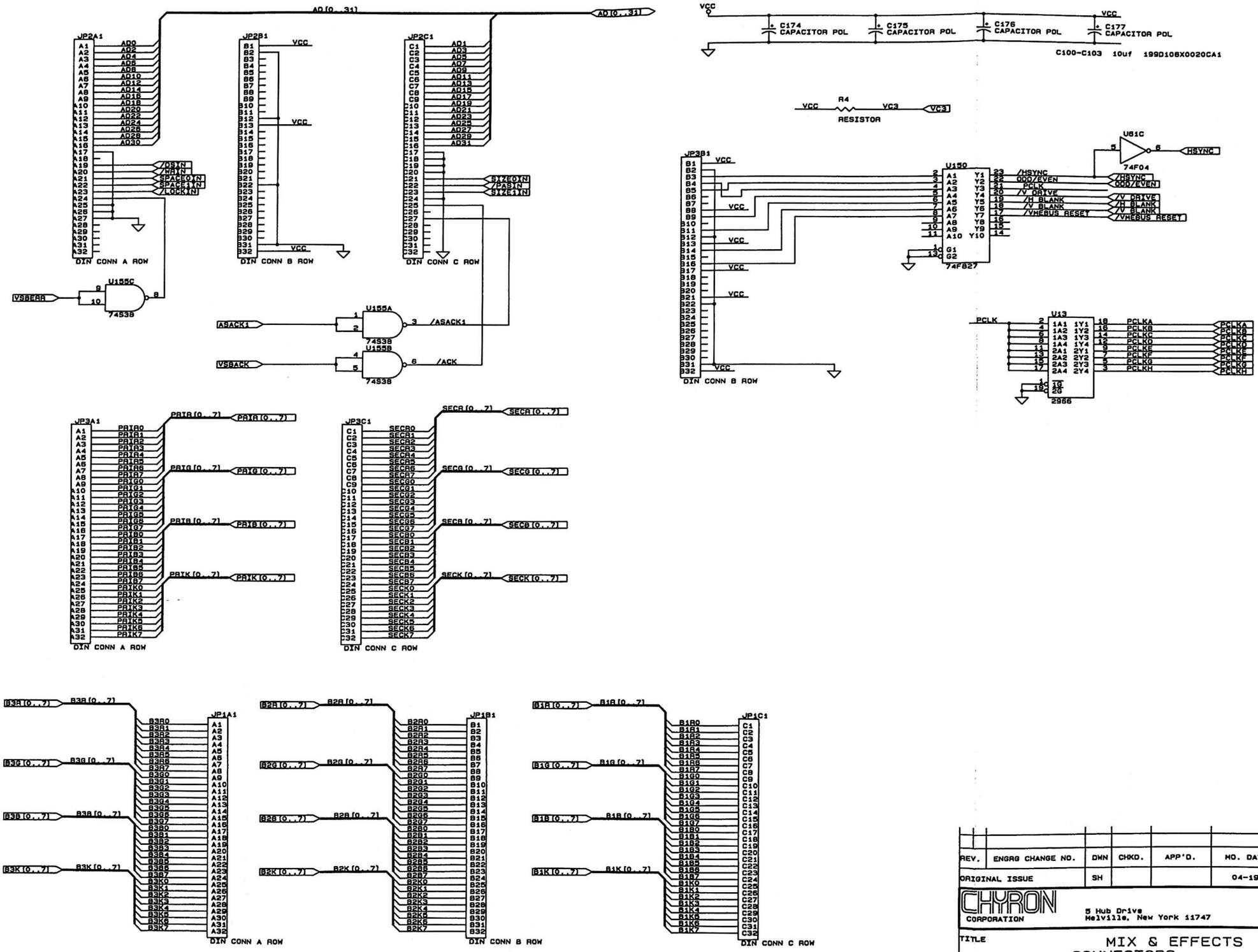

REV.	ENGRG CHANGE NO.	DWN	CHKD.	APP'D.	MO. DAY YR.
ORIGINAL ISSUE		SH			04-19-90

CHYRON CORPORATION
5 Hub Drive
Melville, New York 11747

TITLE: MIX & EFFECTS CONNECTORS

SH. 16

DOCUMENT NUMBER: 2A01387 REV E

OF 16

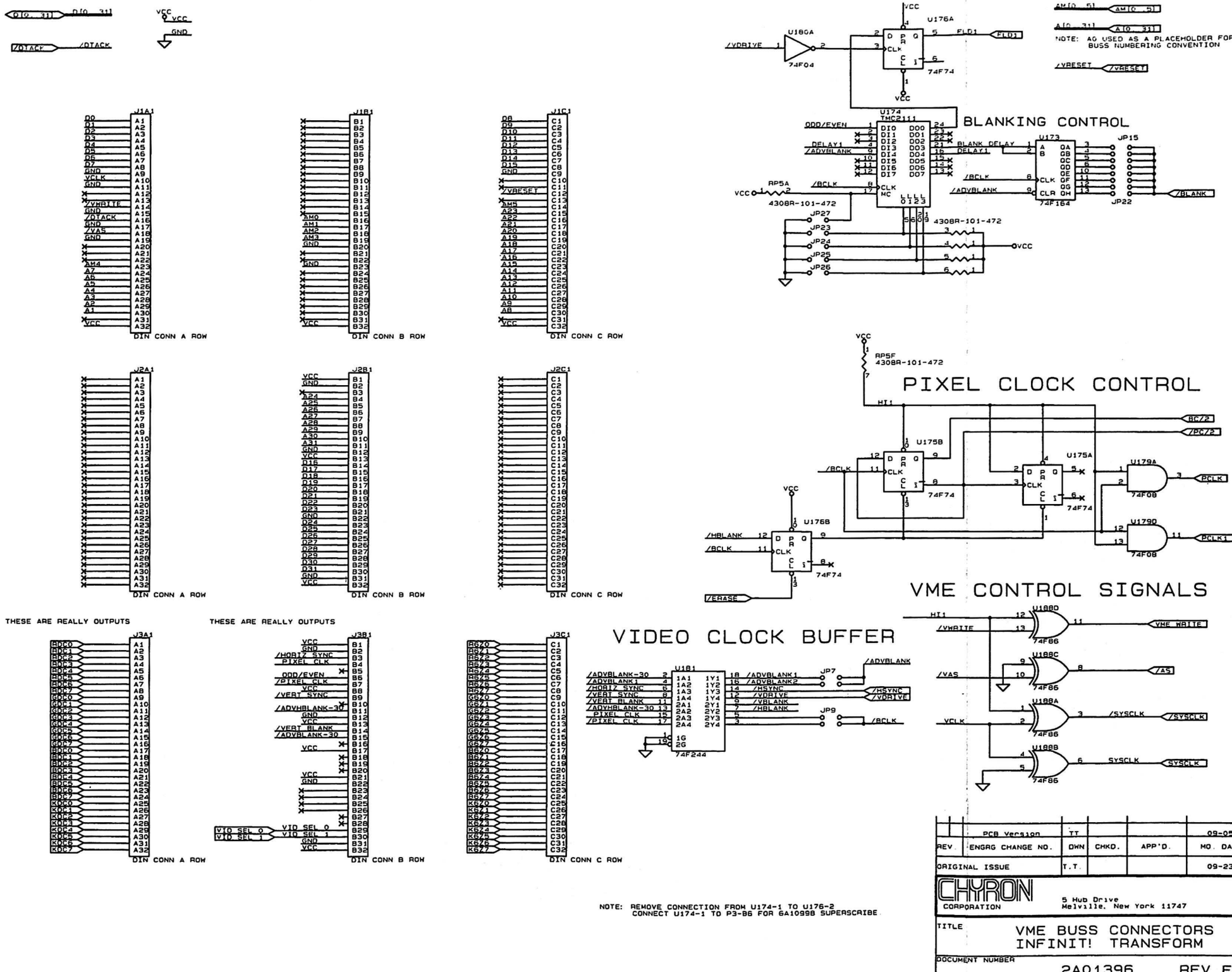
D[0..31]
/DTACK
VCC
GND
J1A1
J1B1
J1C1
DIN CONN A ROW
DIN CONN B ROW
DIN CONN C ROW
J2A1
J2B1
J2C1
THESE ARE REALLY OUTPUTS
J3A1
J3B1
J3C1
U180A
74F04
U176A
74F74
/VDRIVE
FLD1
AM[0..5]
A[0..31]
NOTE: A0 USED AS A PLACEHOLDER FOR BUSS NUMBERING CONVENTION
/VRESET
BLANKING CONTROL
U174
TMC2111
ODD/EVEN
DELAY1
/ADVBLANK
RP5A
4308R-101-472
/BCLK
U173
74F164
BLANK DELAY
JP15
JP22
/BLANK
JP27
JP23
JP24
JP25
JP26
VCC
PIXEL CLOCK CONTROL
RP5F
HI1
U175B
U175A
U176B
U179A
U179D
74F08
/HBLANK
/ERASE
BC/2
/BC/2
PCLK
PCLK1
VME CONTROL SIGNALS
U188D
U188C
U188A
U188B
74F86
/VWRITE
/VAS
VCLK
VME WRITE
/AS
/SYSCLK
SYSCLK
VIDEO CLOCK BUFFER
U181
74F244
/ADVBLANK-30
/ADVBLANK1
/HORIZ SYNC
/VERT SYNC
/VERT BLANK
/ADVHBLANK-30
/PIXEL CLK
/PIXEL CLK
/ADVBLANK2
/HSYNC
/VDRIVE
/HBLANK
JP7
JP9
VID SEL 0
VID SEL 1
NOTE: REMOVE CONNECTION FROM U174-1 TO U176-2
CONNECT U174-1 TO P3-B6 FOR 6A1099B SUPERSCRIBE
PCB Version
TT
09-05-94
REV.
ENGRG CHANGE NO.
DWN
CHKD.
APP'D.
MO. DAY YR.
ORIGINAL ISSUE
T.T.
09-23-91
CHYRON
CORPORATION
5 Hub Drive
Melville, New York 11747
TITLE
VME BUSS CONNECTORS
INFINIT! TRANSFORM
DOCUMENT NUMBER
2A01396
REV F

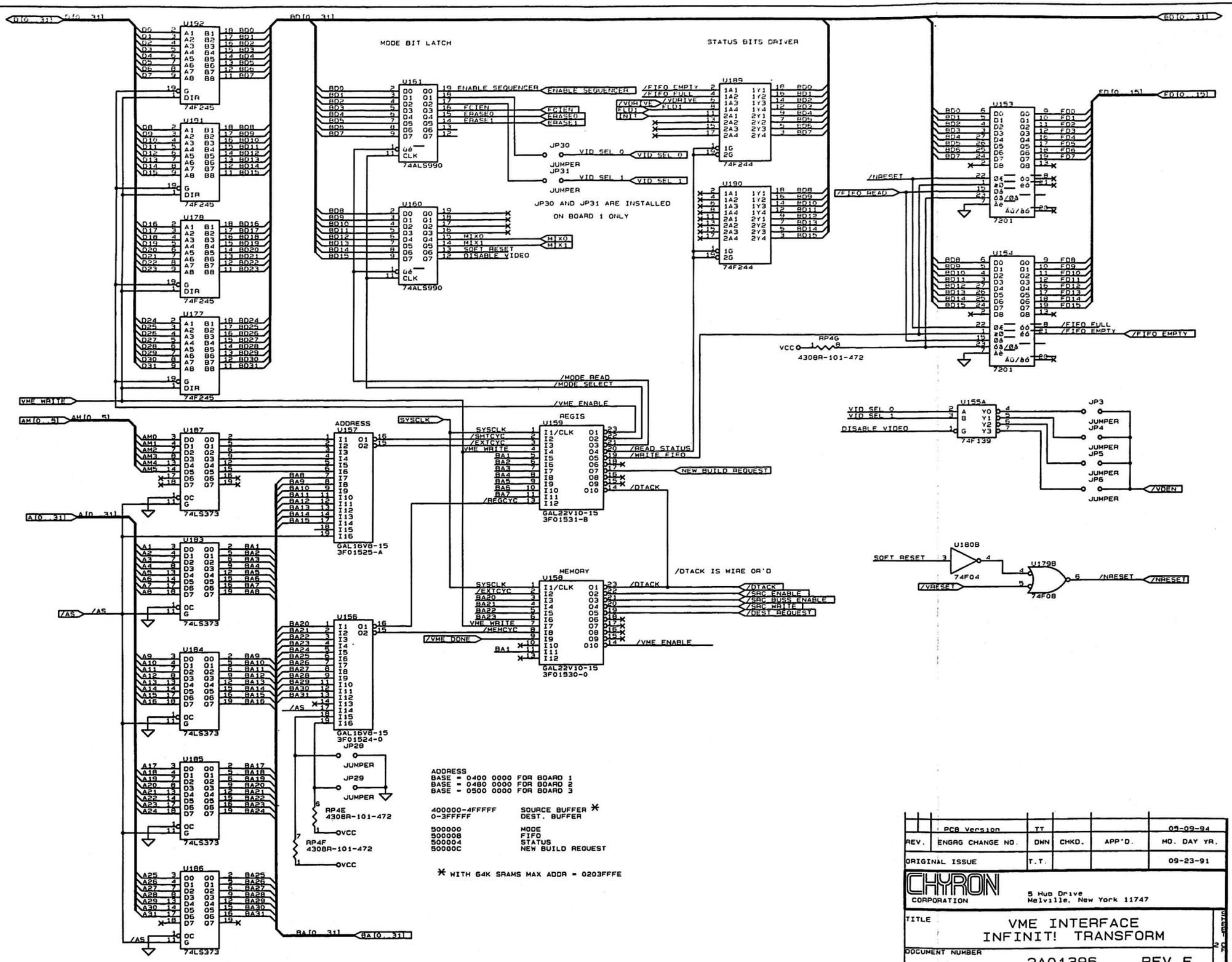
MODE BIT LATCH
STATUS BITS DRIVER
JP30 AND JP31 ARE INSTALLED ON BOARD 1 ONLY
/DTACK IS WIRE OR'D
ADDRESS
BASE = 0400 0000 FOR BOARD 1
BASE = 0480 0000 FOR BOARD 2
BASE = 0500 0000 FOR BOARD 3
400000-4FFFFF SOURCE BUFFER *
0-3FFFFF DEST. BUFFER
500000 MODE
500008 FIFO
500004 STATUS
50000C NEW BUILD REQUEST
* WITH 64K SRAMS MAX ADDR = 0203FFFE
PCB Version TT 09-09-94
REV. ENGRG CHANGE NO. DWN CHKD. APP'D. MO. DAY YR.
ORIGINAL ISSUE T.T. 09-23-91
CHYRON CORPORATION
5 Hub Drive Melville, New York 11747
TITLE
VME INTERFACE
INFINIT! TRANSFORM
DOCUMENT NUMBER
2A01396 REV F

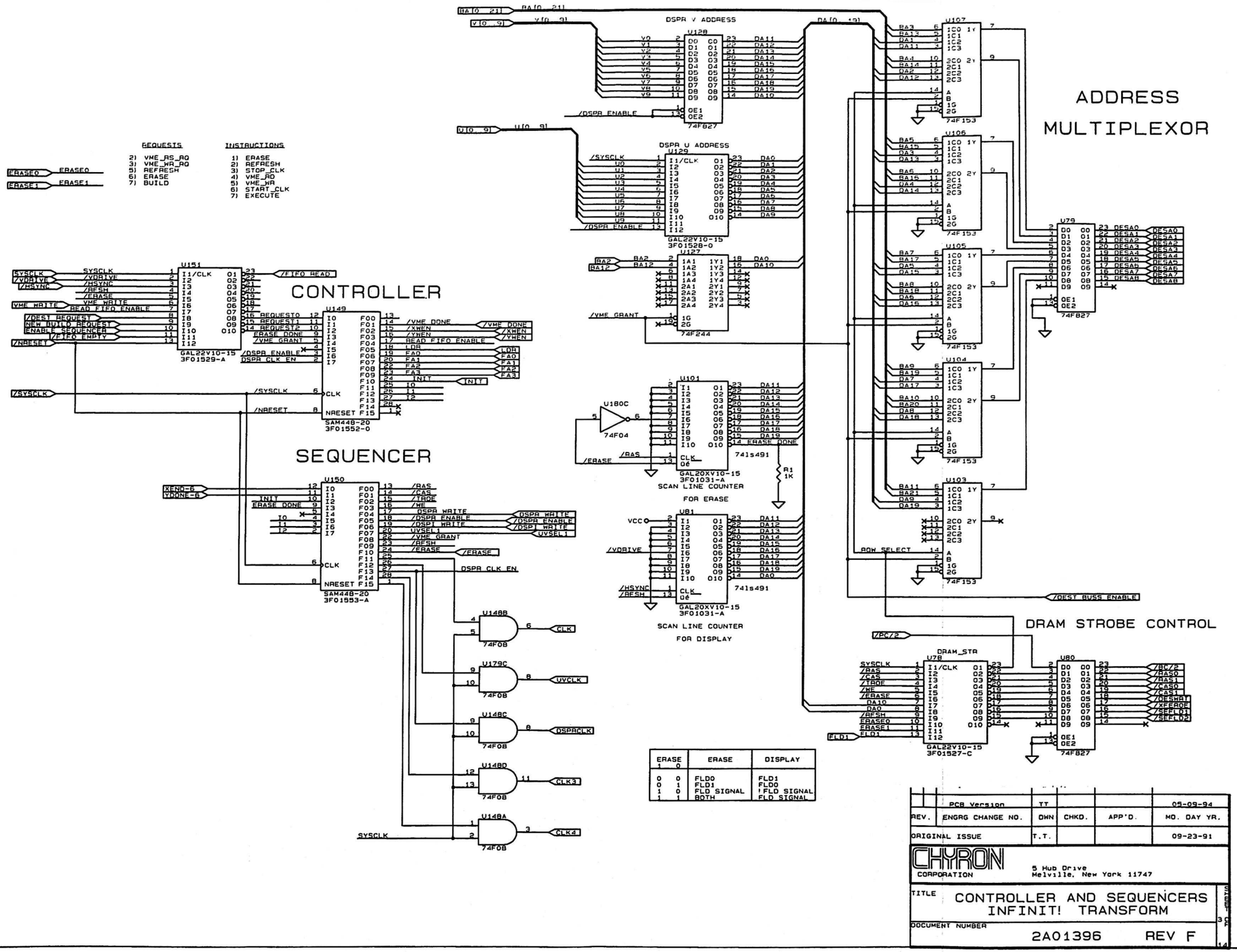
REQUESIS
2) VME_RS_RQ
3) VME_WR_RQ
5) REFRESH
6) ERASE
7) BUILD
INSTRUCTIONS
1) ERASE
2) REFRESH
3) STOP_CLK
4) VME_RQ
5) VME_WR
6) START_CLK
7) EXECUTE
ERASE0
ERASE1
DSPR V ADDRESS
DSPR U ADDRESS
ADDRESS MULTIPLEXOR
CONTROLLER
SEQUENCER
SCAN LINE COUNTER FOR ERASE
SCAN LINE COUNTER FOR DISPLAY
DRAM STROBE CONTROL
ROW SELECT
/DEST BUSS ENABLE
DSPR CLK EN
ERASE
DISPLAY
FLD0
FLD1
FLD SIGNAL
! FLD SIGNAL
BOTH
PCB Version
TT
05-09-94
ORIGINAL ISSUE
09-23-91
CHYRON CORPORATION
5 Hub Drive
Melville, New York 11747
CONTROLLER AND SEQUENCERS
INFINIT! TRANSFORM
2A01396 REV F

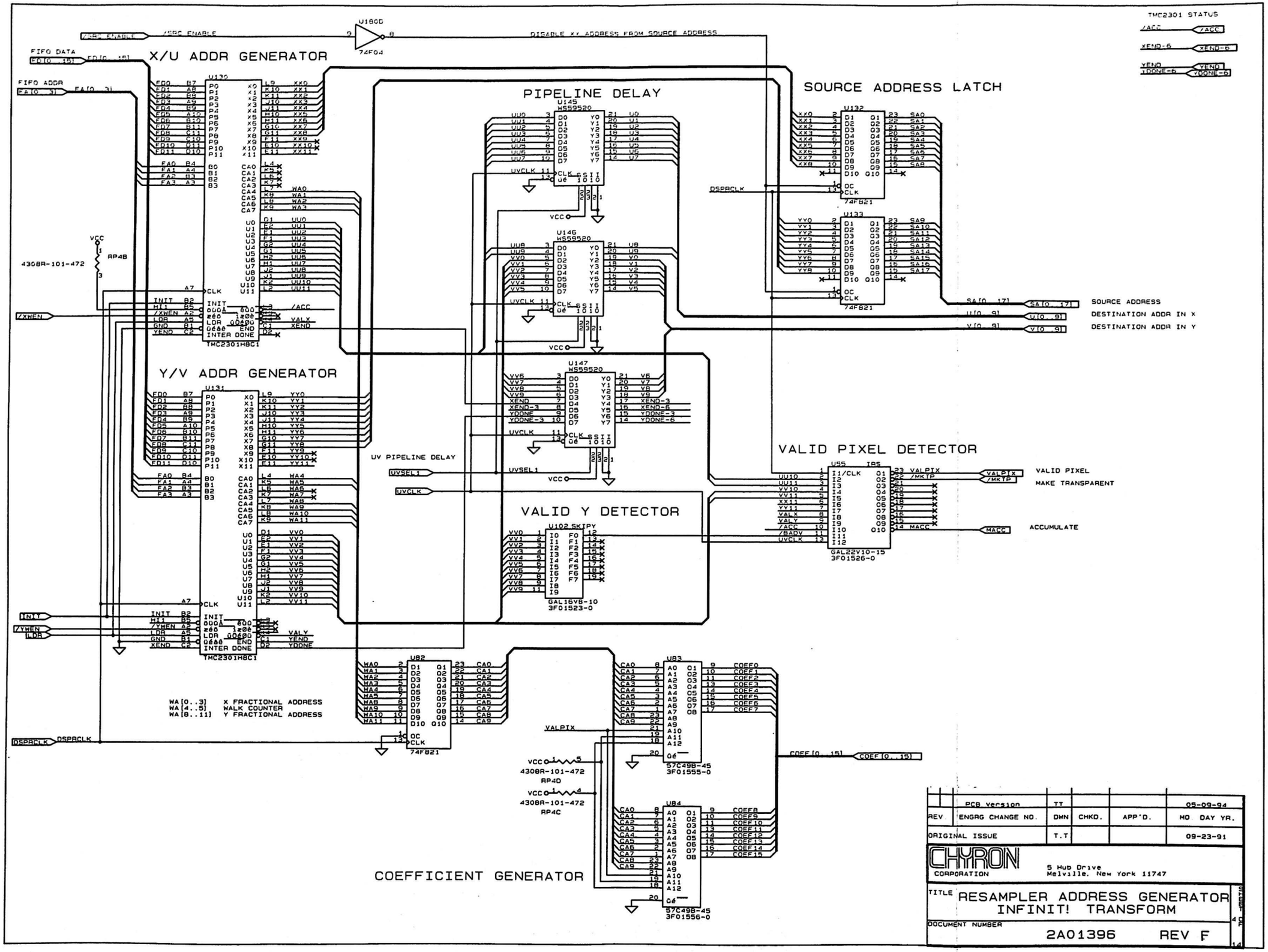

TMC2301 STATUS
/ACC
XEND-6
YEND
YDONE-6
/SRC ENABLE
U180D
74F04
DISABLE XY ADDRESS FROM SOURCE ADDRESS
FIFO DATA
FIFO ADDR
X/U ADDR GENERATOR
U130
TMC2301HBC1
PIPELINE DELAY
U145
WS59520
U146
WS59520
U147
WS59520
SOURCE ADDRESS LATCH
U132
74F821
U133
74F821
DSPRCLK
SOURCE ADDRESS
DESTINATION ADDR IN X
DESTINATION ADDR IN Y
VCC
RP4B
4308R-101-472
/XWEN
Y/V ADDR GENERATOR
U131
TMC2301HBC1
UV PIPELINE DELAY
UVSEL1
UVCLK
VALID PIXEL DETECTOR
U55
IRS
GAL22V10-15
3F01526-0
VALID PIXEL
MAKE TRANSPARENT
ACCUMULATE
VALID Y DETECTOR
U102 SKIPY
GAL16V8-10
3F01523-0
INIT
/YWEN
LDR
WA[0..3] X FRACTIONAL ADDRESS
WA[4..5] WALK COUNTER
WA[8..11] Y FRACTIONAL ADDRESS
U82
74F821
U83
57C498-45
3F01555-0
U84
57C498-45
3F01556-0
VALPIX
COEF[0..15]
4308R-101-472
RP4D
4308R-101-472
RP4C
COEFFICIENT GENERATOR
PCB Version
TT
05-09-94
REV
ENGRG CHANGE NO.
DWN
CHKD.
APP'D.
MO DAY YR.
ORIGINAL ISSUE
T.T
09-23-91
CHYRON
CORPORATION
5 Hub Drive
Melville, New York 11747
TITLE
RESAMPLER ADDRESS GENERATOR
INFINIT! TRANSFORM
DOCUMENT NUMBER
2A01396
REV F

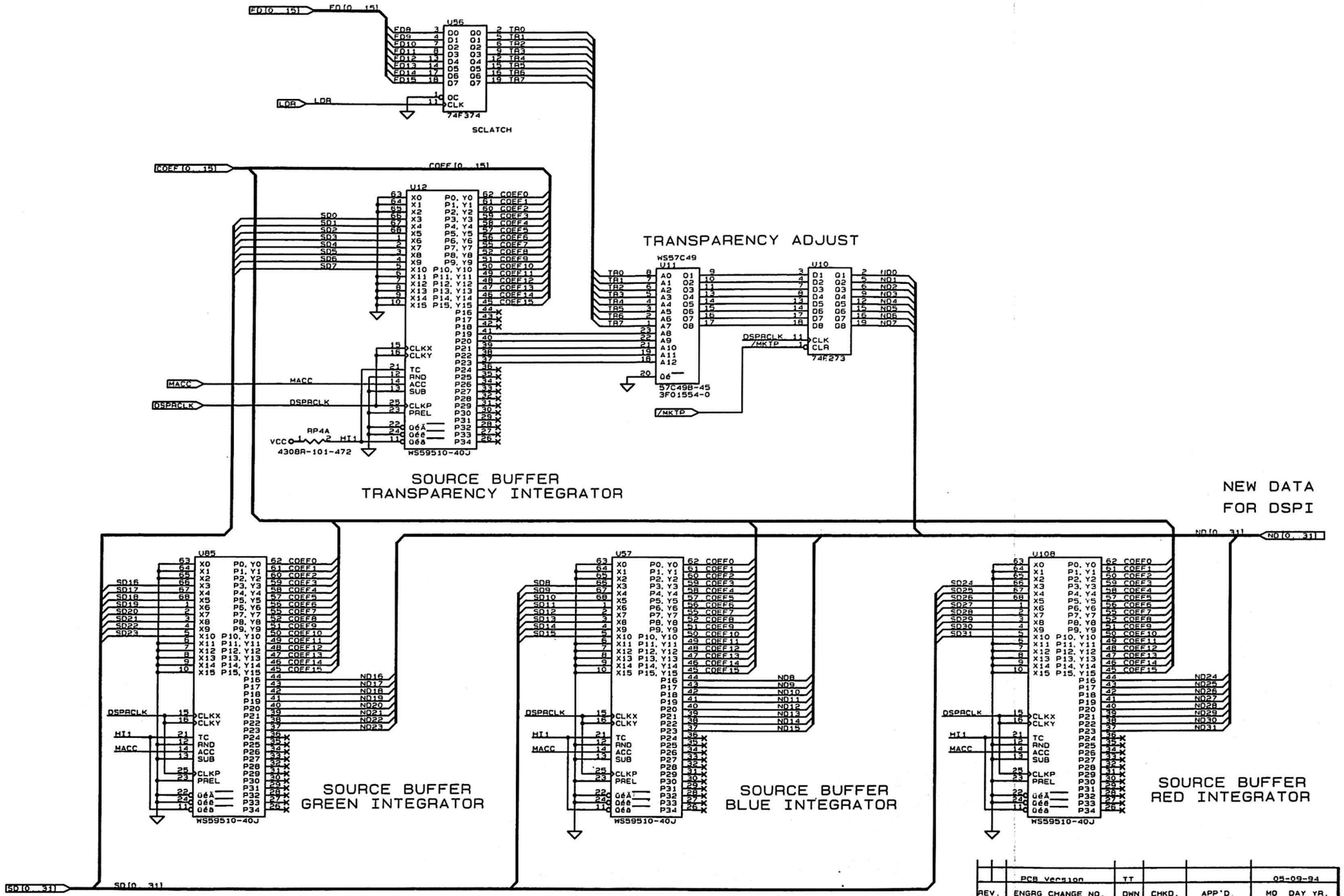

	PCB Version	TT			05-09-94
REV.	ENGRG CHANGE NO.	DWN	CHKD.	APP'D	MO DAY YR.
ORIGINAL ISSUE		T.T			09-23-91

CHYRON CORPORATION
5 Hub Drive
Melville, New York 11747

TITLE
DSPR INTEGRATORS
INFINIT! TRANSFORM

DOCUMENT NUMBER
2A01396 REV F

SHEET 14

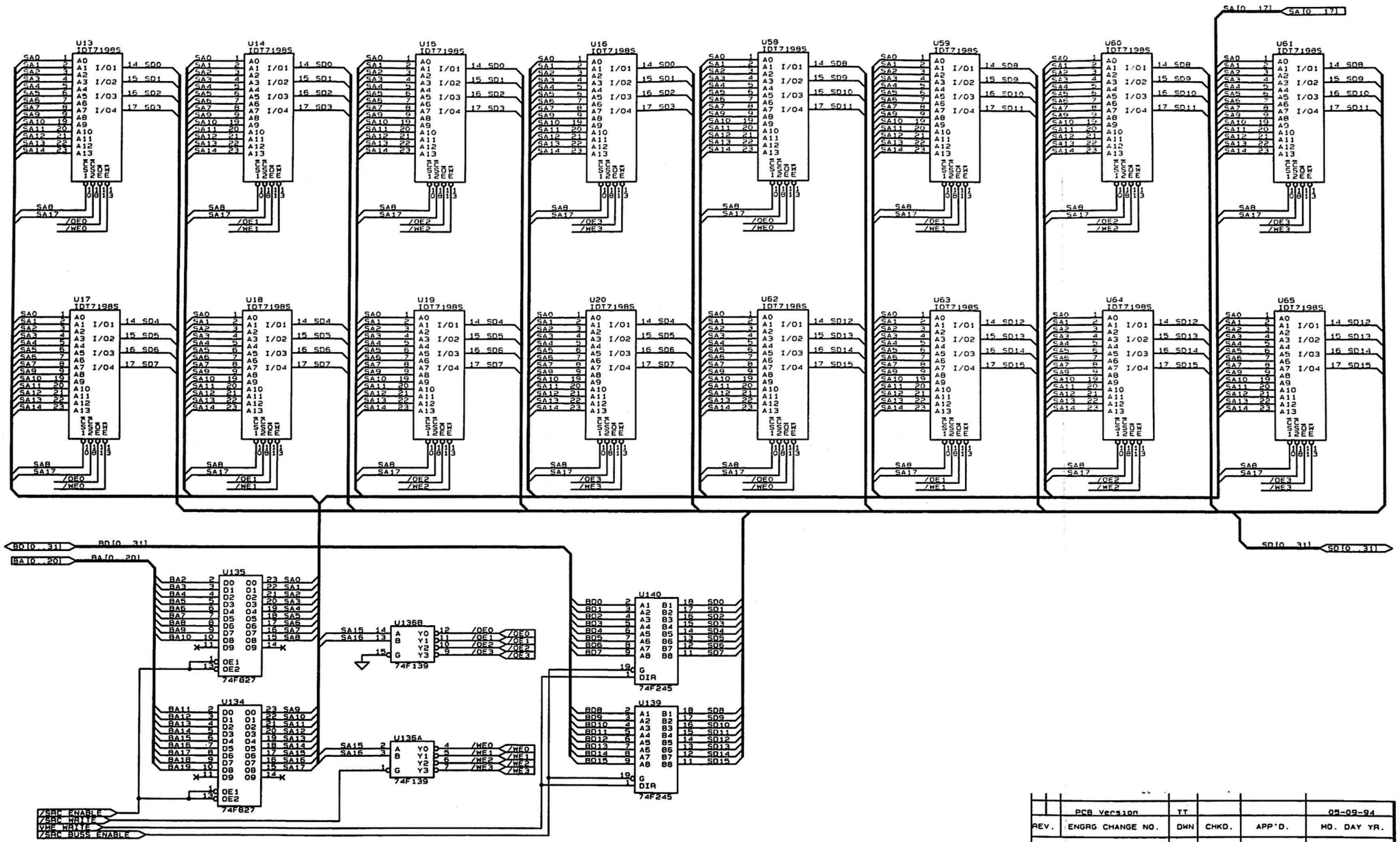

	PCB Version	TT			05-09-94
REV.	ENGRG CHANGE NO.	DWN	CHKD.	APP'D.	MO. DAY YR.
ORIGINAL ISSUE		T.T.			09-23-91

CHYRON CORPORATION
5 Hub Drive
Melville, New York 11747

TITLE: SOURCE BUFFER INFINIT! TRANSFORM

DOCUMENT NUMBER: 2A01396 REV F

SIZE: D

SHEET 6 OF 14

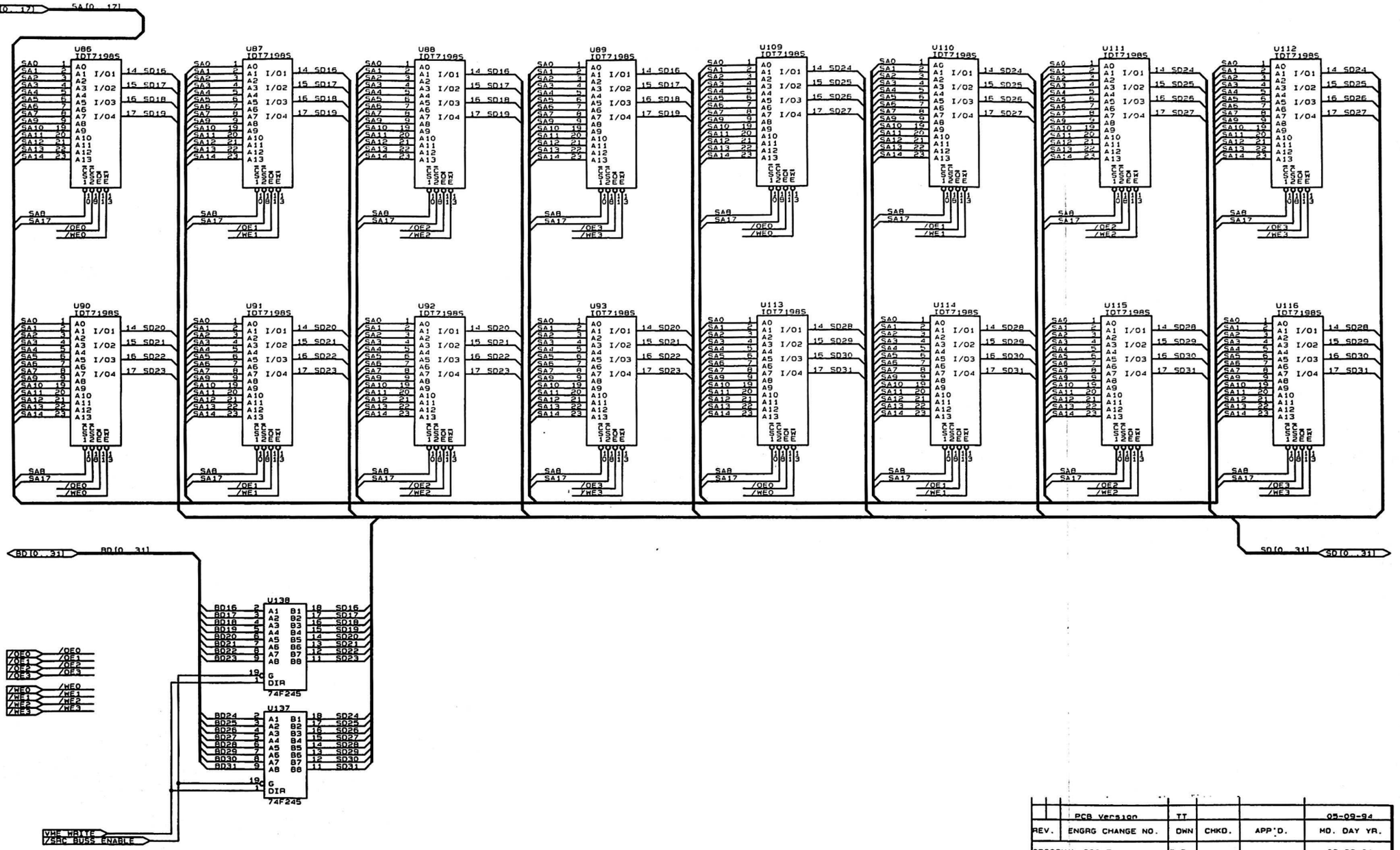

	PCB Version	TT			05-09-94
REV.	ENGRG CHANGE NO.	DWN	CHKD.	APP'D.	MO. DAY YR.
ORIGINAL ISSUE		T.T.			09-23-91

CHYRON CORPORATION
5 Hub Drive
Melville, New York 11747

TITLE
SOURCE BUFFER
INFINIT! TRANSFORM

DOCUMENT NUMBER
2A01396 REV F

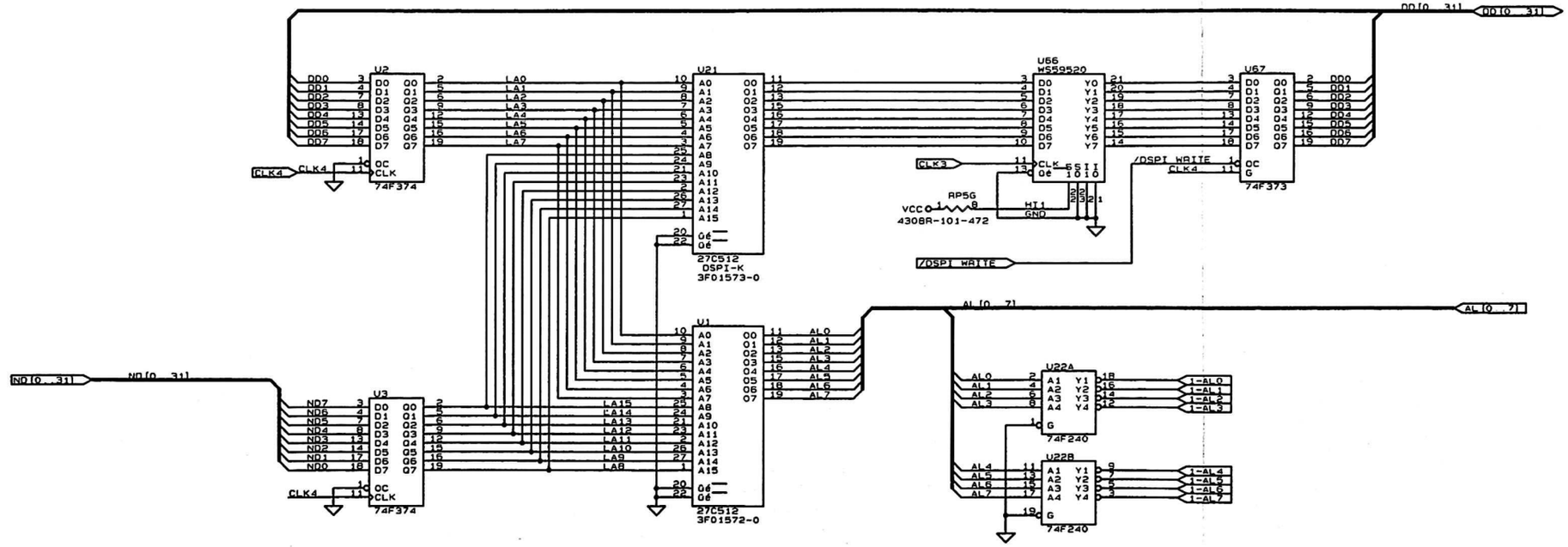

	PCB Version	TT			05-09-94
REV.	ENGRG CHANGE NO.	DWN	CHKD.	APP'D.	MO. DAY YR.
ORIGINAL ISSUE		T.T			09-23-91

CHYRON CORPORATION
5 Hub Drive
Melville, New York 11747

TITLE: DSPI COEFFICIENT GENERATOR
INFINIT! TRANSFORM

DOCUMENT NUMBER: 2A01396 REV F

SHEET 8 OF 14

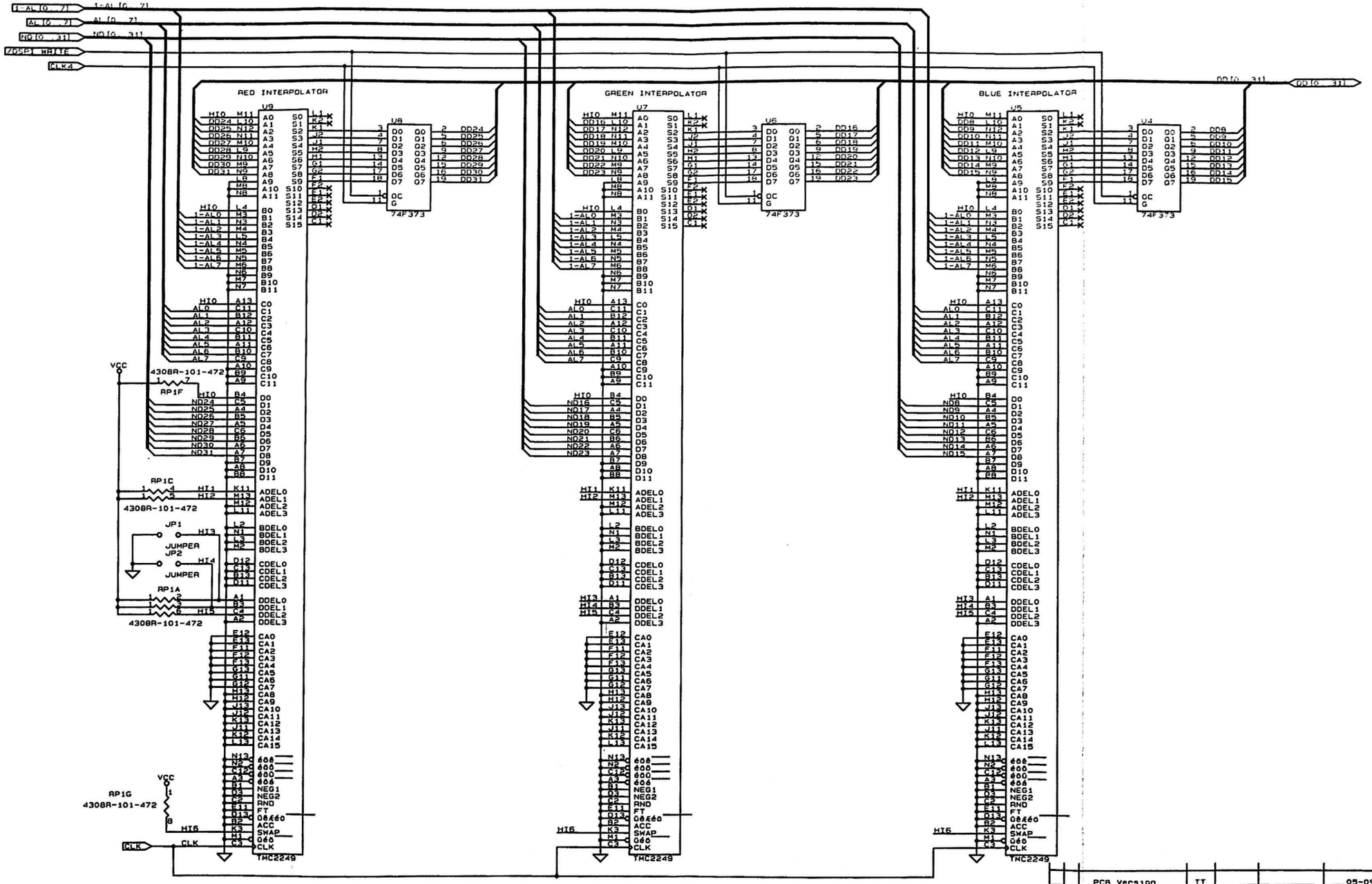

REV.	ENGRG CHANGE NO.	DWN	CHKD.	APP'D.	MO. DAY YR.
	PCB Version	TT			05-09-94
ORIGINAL ISSUE		T.T			09-23-91

CHYRON CORPORATION
5 Hub Drive
Melville, New York 11747

TITLE
COLOR INTERPOLATORS
INFINIT! TRANSFORM

DOCUMENT NUMBER
2A01396 REV F

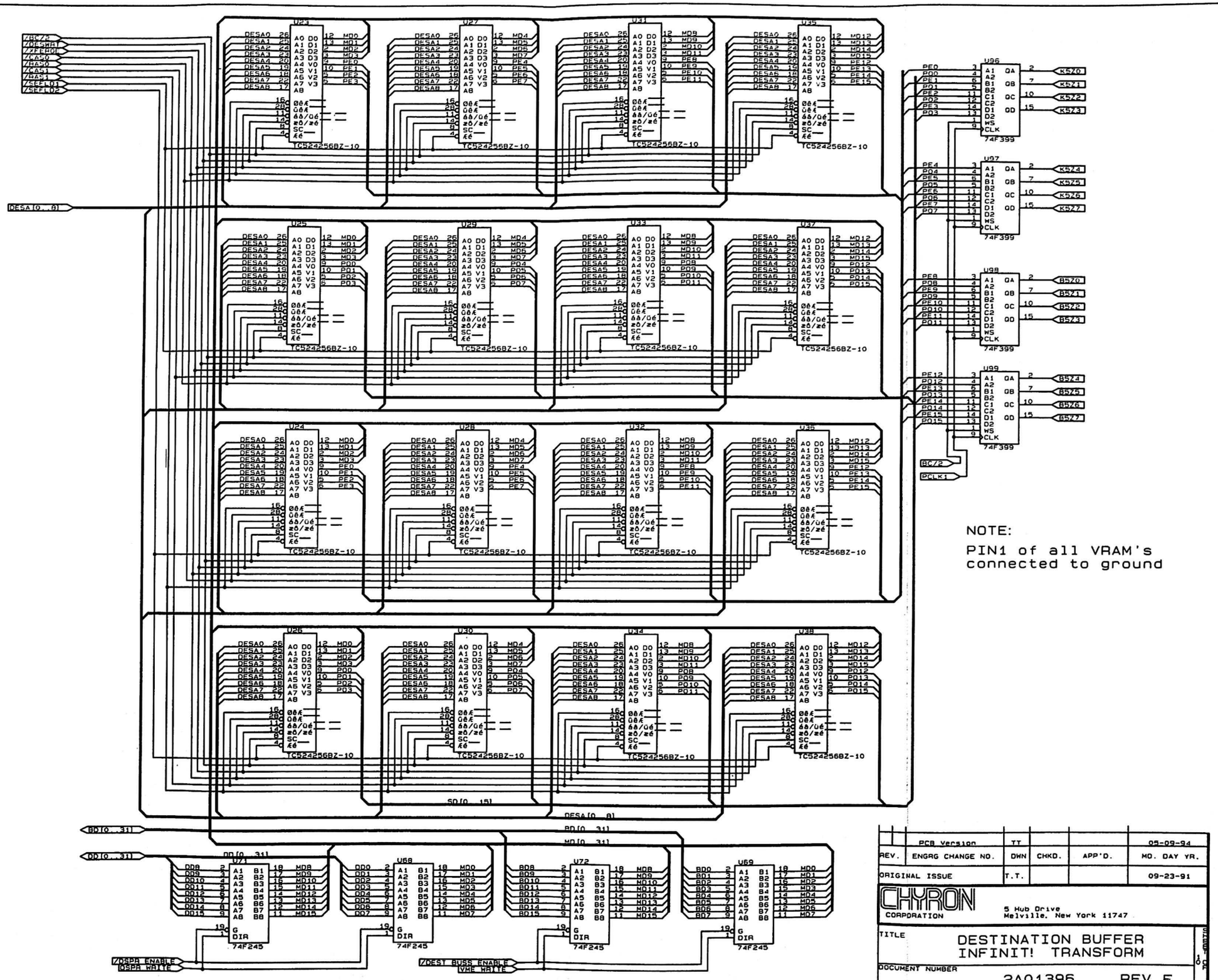

NOTE:

PIN1 of all VRAM's connected to ground

REV.	ENGRG CHANGE NO.	DWN	CHKD.	APP'D.	MO. DAY YR.
	PCB Version	TT			05-09-94
ORIGINAL ISSUE		T.T.			09-23-91

CHYRON CORPORATION
5 Hub Drive
Melville, New York 11747

TITLE: DESTINATION BUFFER INFINIT! TRANSFORM

DOCUMENT NUMBER: 2A01396 REV F

SHEET 14 OF 14

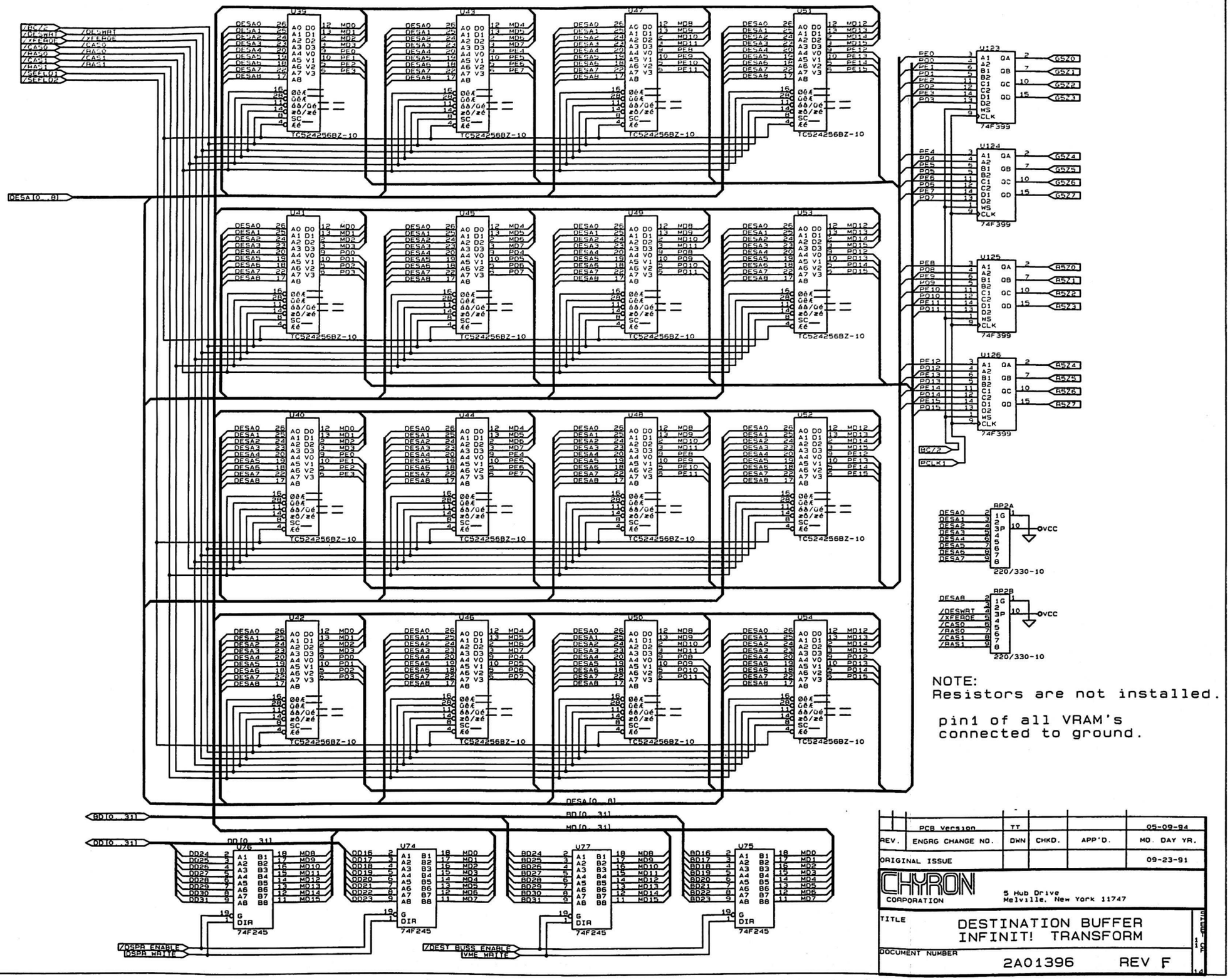

REV.	ENGRG CHANGE NO.	DWN	CHKD.	APP'D.	MO. DAY YR.
	PCB Version	TT			05-09-94
ORIGINAL ISSUE					09-23-91

CHYRON CORPORATION
5 Hub Drive
Melville, New York 11747

TITLE: DESTINATION BUFFER INFINIT! TRANSFORM

DOCUMENT NUMBER: 2A01396 REV F

SHEET 14 OF 14

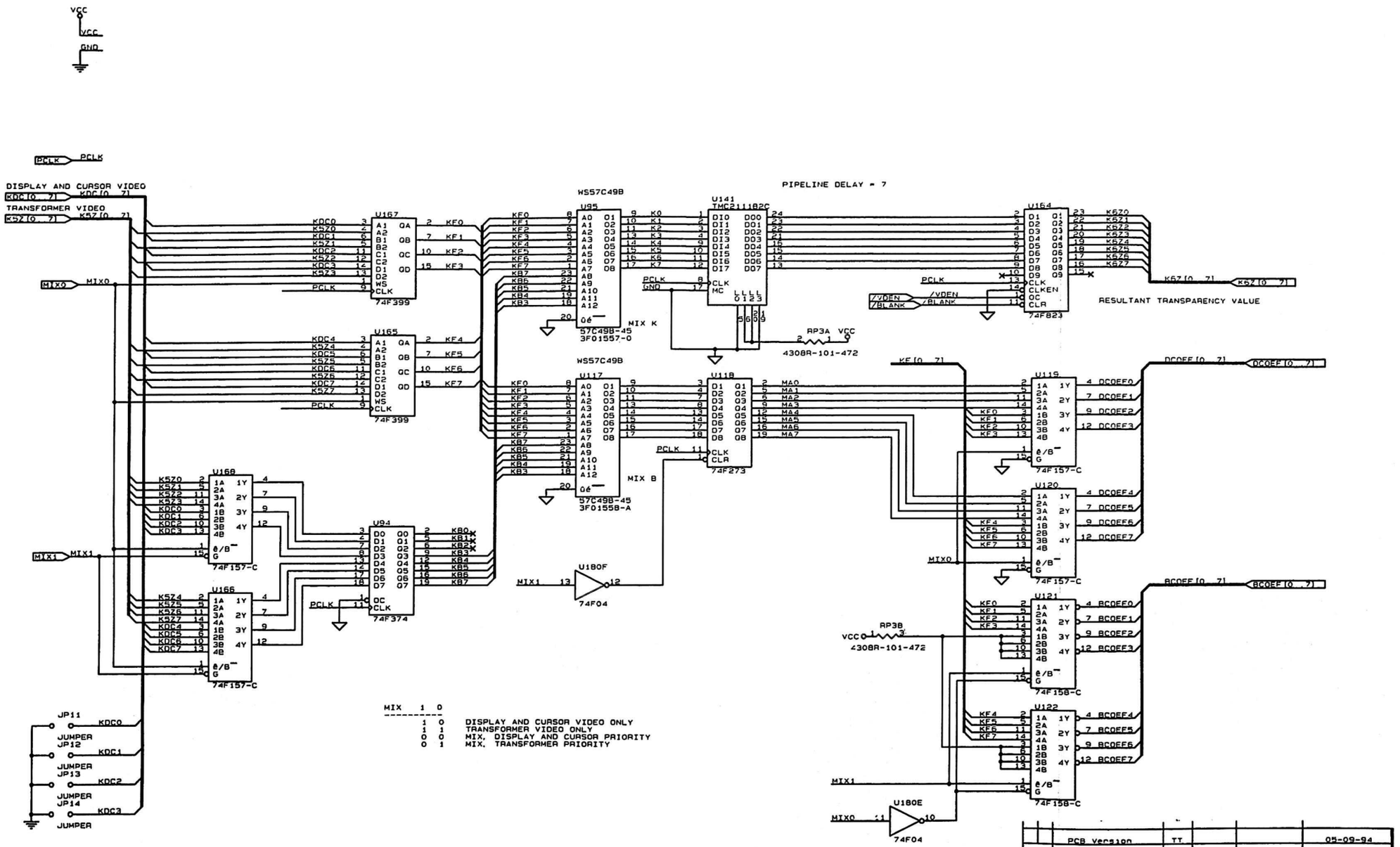

REV.	ENGRG CHANGE NO.	DWN	CHKD.	APP'D	MO. DAY YR.
	PCB Version	TT			05-09-94
ORIGINAL ISSUE		T.T.			09-23-91

CHYRON CORPORATION
5 Hub Drive
Melville, New York 11747

TITLE
MIX MUX 1
INFINIT! TRANSFORM

DOCUMENT NUMBER
2A01396 REV F

SIZE D

SHEET 14

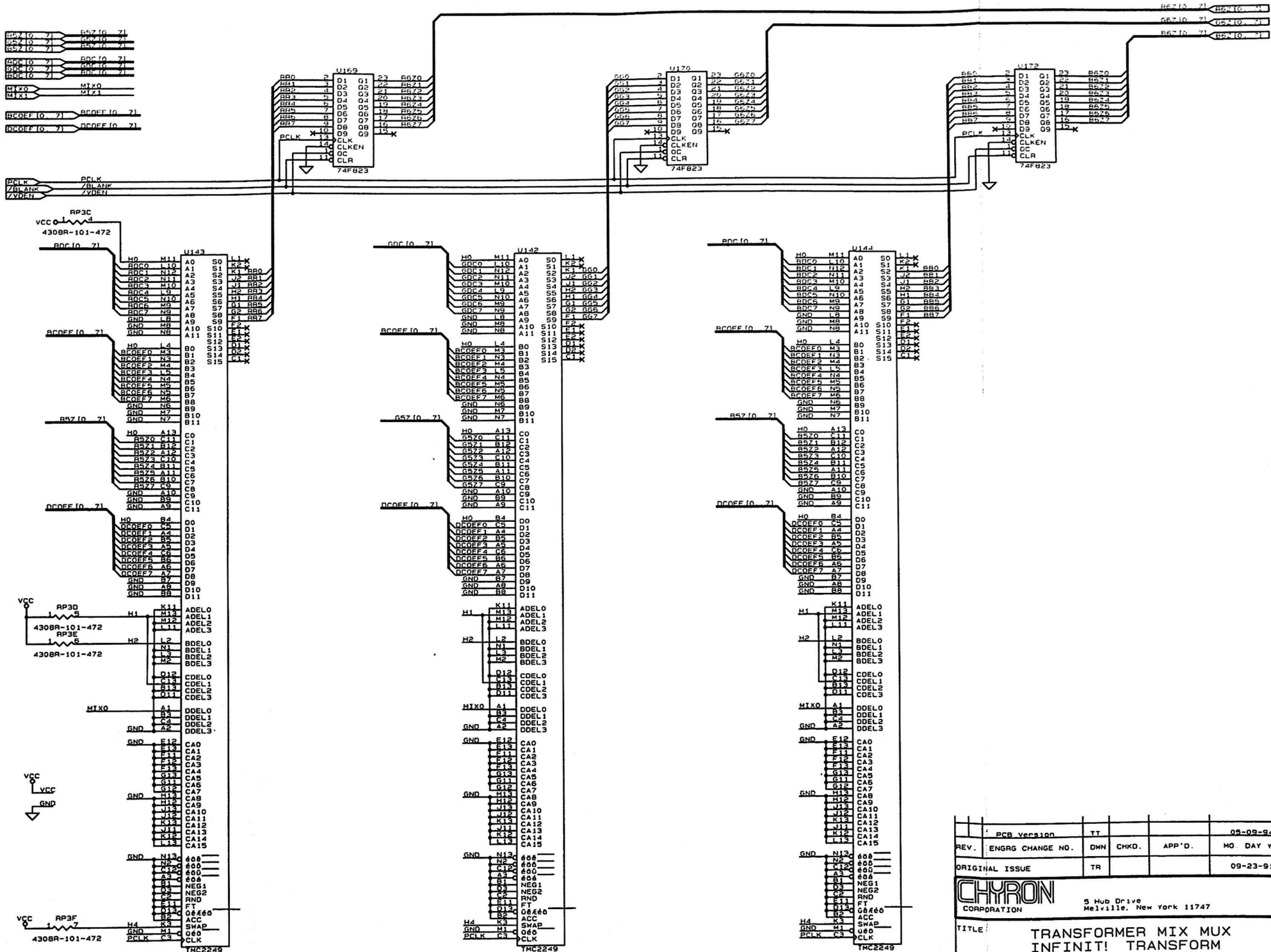

	PCB Version	TT			05-09-94
REV.	ENGRG CHANGE NO.	DWN	CHKD.	APP'D.	MO. DAY YR.
ORIGINAL ISSUE		TR			09-23-91

CHYRON CORPORATION
5 Hub Drive
Melville, New York 11747

TITLE: TRANSFORMER MIX MUX
INFINIT! TRANSFORM

DOCUMENT NUMBER: 2A01396 REV F

SHEET 14 OF 14

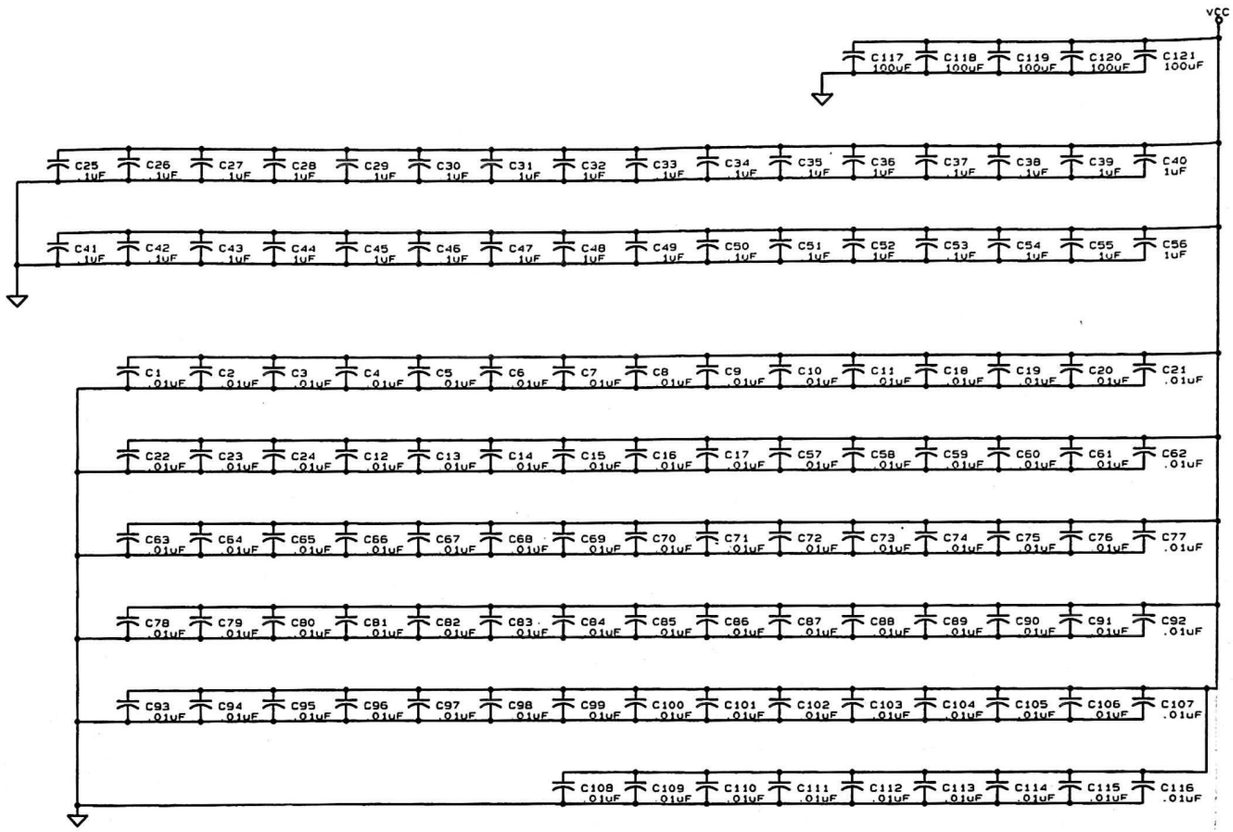

	PCB Version	TT			05-09-94
REV.	ENGRG CHANGE NO.	DWN	CHKD.	APP'D.	MO. DAY YR.
ORIGINAL ISSUE		TT			09-23-91

CHYRON CORPORATION
5 Hub Drive
Melville, New York 11747

TITLE
CAPACITOR PAGE
INFINIT! TRANSFORM

DOCUMENT NUMBER
2A01396 REV F

SHEET 14 OF 14

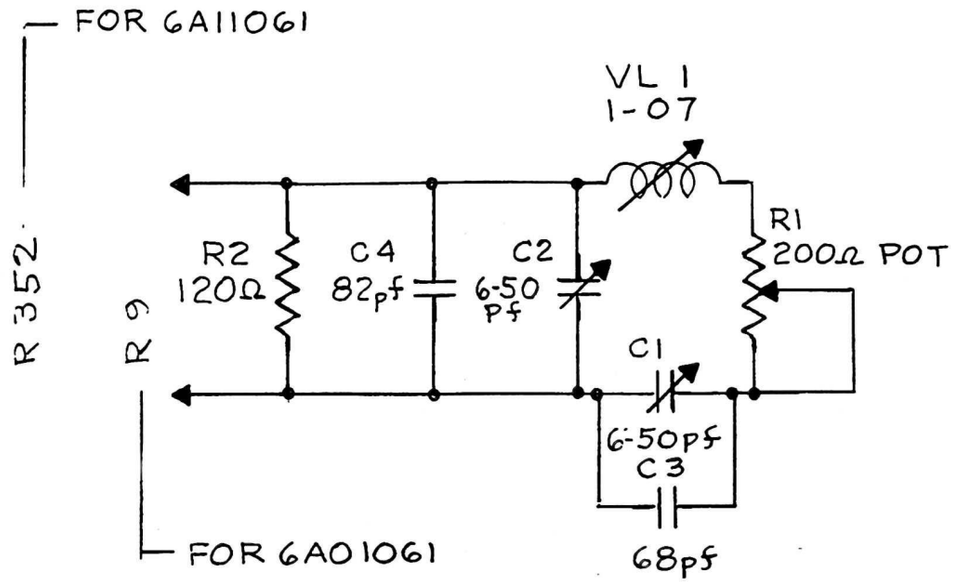

REV	ENGRG CHANGE NO	DATE	CHKD	APP'D	MFG RELEASE
ORIGINAL ISSUE	CN-4232	M-5-			11-15-90

CHYRON CORPORATION
5 Hub Drive
Melville New York 11747

TITLE: SCHEMATIC FOR SINX/X ENCODER BD.

A 2A0 1510 REV

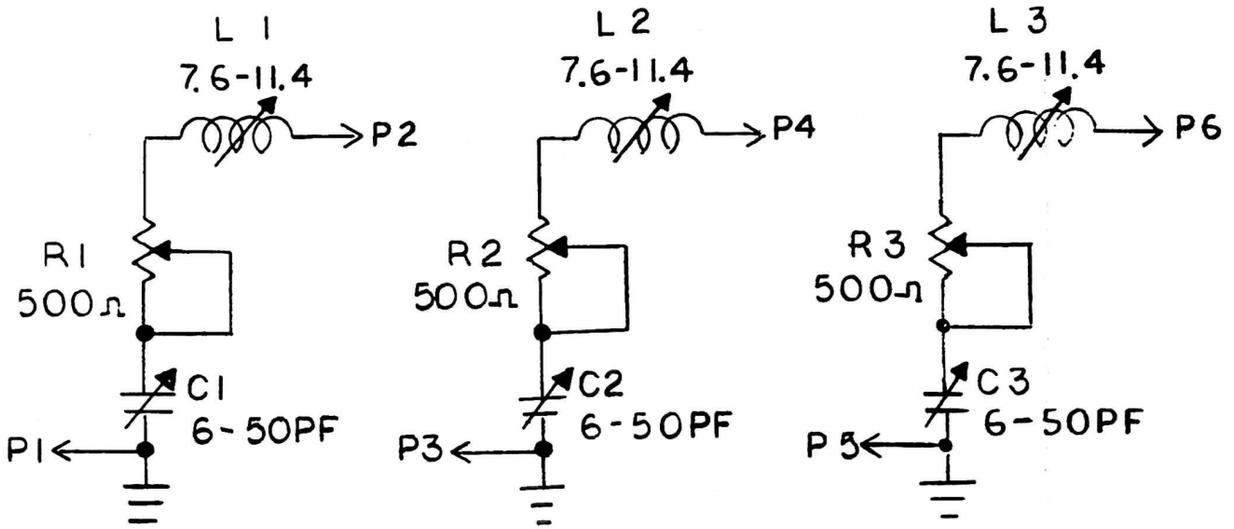

	CN-4232	FM			11-16-92

CHYRON CORPORATION

SCHEMATIC SINX X RGB
INFINITT

A 2A0 1512

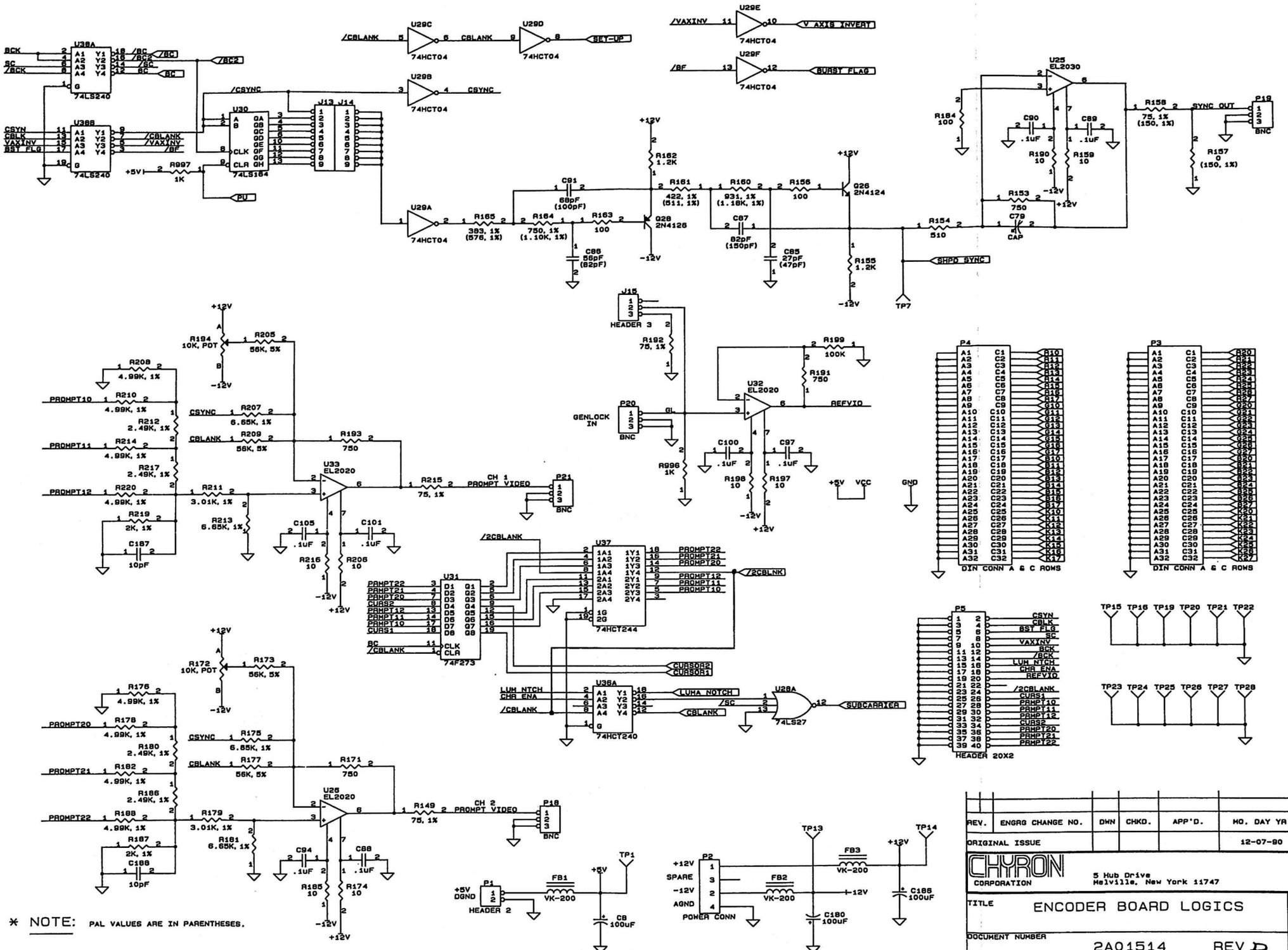
U38A
74LS240
U38B
74LS240
U30
74LS164
U13 U14
U29C
74HCT04
U29D
74HCT04
U29B
74HCT04
U29E
74HCT04
U29F
74HCT04
U29A
74HCT04
U25
EL2030
U26
EL2020
U32
EL2020
U33
EL2020
U31
74F273
U37
74HCT244
U36A
74HCT240
U28A
74LS27
/BCK
SC
/BCK
CSYN
CBLK
VAXINV
BST FLG
/BC2
/BC
/CBLANK
/VAXINV
/BF
/CSYNC
CSYNC
/VAXINV
V AXIS XNVERT
/BF
BURST FLAG
SET-UP
+5V
R997
1K
PU
+12V
R162
1.2K
R161
422, 1%
(511, 1%)
R160
931, 1%
(1.18K, 1%)
R156
100
Q26
2N4124
C91
68pF
(100pF)
R165
383, 1%
(576, 1%)
R164
750, 1%
(1.10K, 1%)
R163
100
Q28
2N4126
C86
56pF
(82pF)
C87
82pF
(150pF)
C85
27pF
(47pF)
R155
1.2K
-12V
R154
510
SHPD SYNC
TP7
R184
100
C90
.1uF
C89
.1uF
R190
10
R159
10
R153
750
C79
CAP
R158
75, 1%
(150, 1%)
SYNC OUT
P19
BNC
R157
0
(150, 1%)
J15
HEADER 3
R192
75, 1%
R199
100K
R191
750
P20
GENLOCK IN
BNC
GL
REFVID
R198
10
R197
10
C100
.1uF
C97
.1uF
R196
1K
+5V VCC
GND
R194
10K, POT
R205
56K, 5%
R208
4.99K, 1%
PROMPT10
R210
4.99K, 1%
R212
2.49K, 1%
PROMPT11
R214
4.99K, 1%
R217
2.49K, 1%
PROMPT12
R220
4.99K, 1%
R219
2K, 1%
C187
10pF
CSYNC
R207
6.65K, 1%
CBLANK
R209
56K, 5%
R193
750
R211
3.01K, 1%
R213
6.65K, 1%
R215
75, 1%
CH 1
PROMPT VIDEO
P21
BNC
C105
.1uF
C101
.1uF
R216
10
R206
10
P4
P3
DIN CONN A & C ROWS
DIN CONN A & C ROWS
/2CBLANK
/2CBLNK
PRMPT22
PRMPT21
PRMPT20
CURSR2
PRMPT12
PRMPT11
PRMPT10
CURSR1
BC
/CBLANK
CURSOR2
CURSOR1
LUM NTCH
CHR ENA
/CBLANK
LUMA NOTCH
/SC
CBLANK
SUBCARRIER
P5
HEADER 20X2
TP15 TP16 TP19 TP20 TP21 TP22
TP23 TP24 TP25 TP26 TP27 TP28
R172
10K, POT
R173
56K, 5%
R176
4.99K, 1%
PROMPT20
R178
4.99K, 1%
R180
2.49K, 1%
PROMPT21
R182
4.99K, 1%
R186
2.49K, 1%
PROMPT22
R188
4.99K, 1%
R187
2K, 1%
C188
10pF
CSYNC
R175
6.65K, 1%
CBLANK
R177
56K, 5%
R171
750
R179
3.01K, 1%
R181
6.65K, 1%
R149
75, 1%
CH 2
PROMPT VIDEO
P18
BNC
C94
.1uF
C88
.1uF
R185
10
R174
10
P1
HEADER 2
+5V
DGND
FB1
VK-200
TP1
C8
100uF
P2
POWER CONN
+12V
SPARE
-12V
AGND
FB2
VK-200
FB3
VK-200
TP13
TP14
C180
100uF
C186
100uF
* NOTE: PAL VALUES ARE IN PARENTHESES.
REV.
ENGRG CHANGE NO.
DWN
CHKD.
APP'D.
MO. DAY YR.
ORIGINAL ISSUE
12-07-90
CHYRON
CORPORATION
5 Hub Drive
Melville, New York 11747
TITLE
ENCODER BOARD LOGICS
DOCUMENT NUMBER
2A01514
REV D
SHEET 1 OF 1

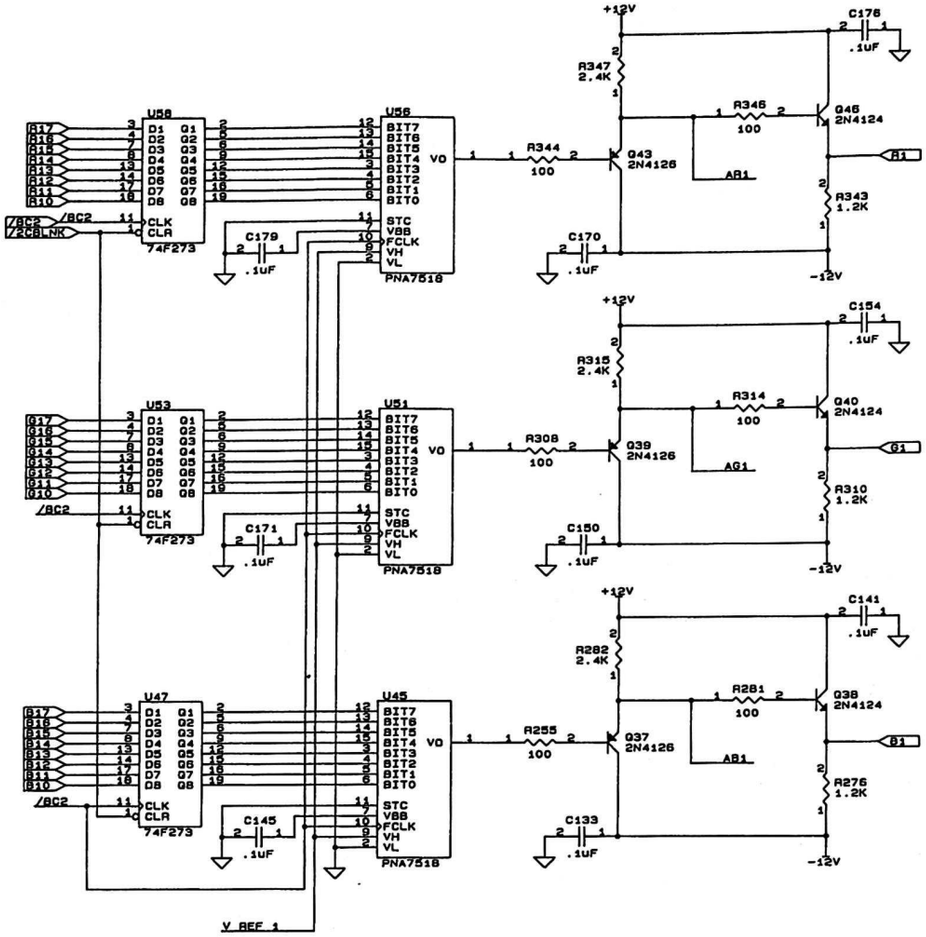

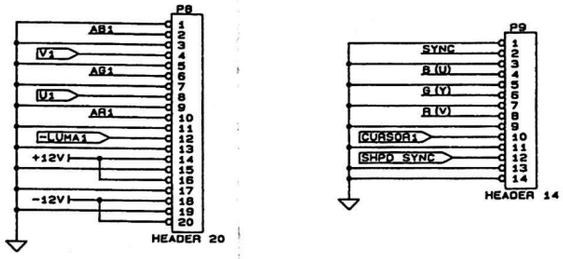

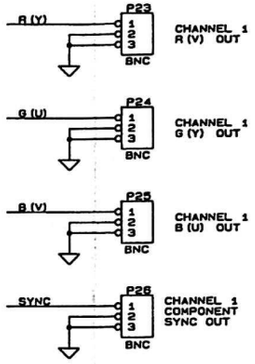

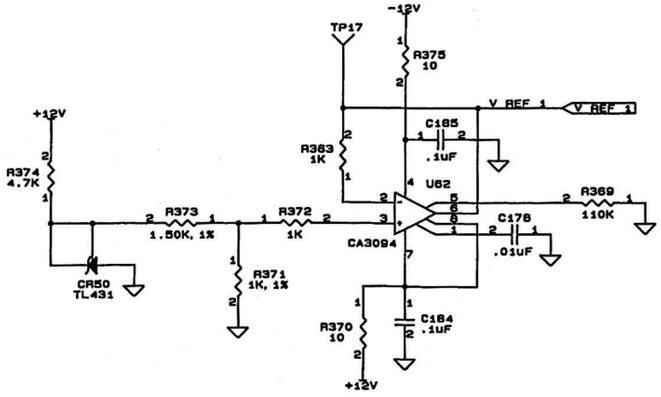

REV.	ENGRG CHANGE NO.	DWN	CHKD.	APP'D.	MO. DAY YR.
ORIGINAL ISSUE					12-07-90

CHYRON CORPORATION
5 Hub Drive
Melville, New York 11747

TITLE: ENCODER BOARD LOGICS

DOCUMENT NUMBER: 2A01514 REV D

SIZE D

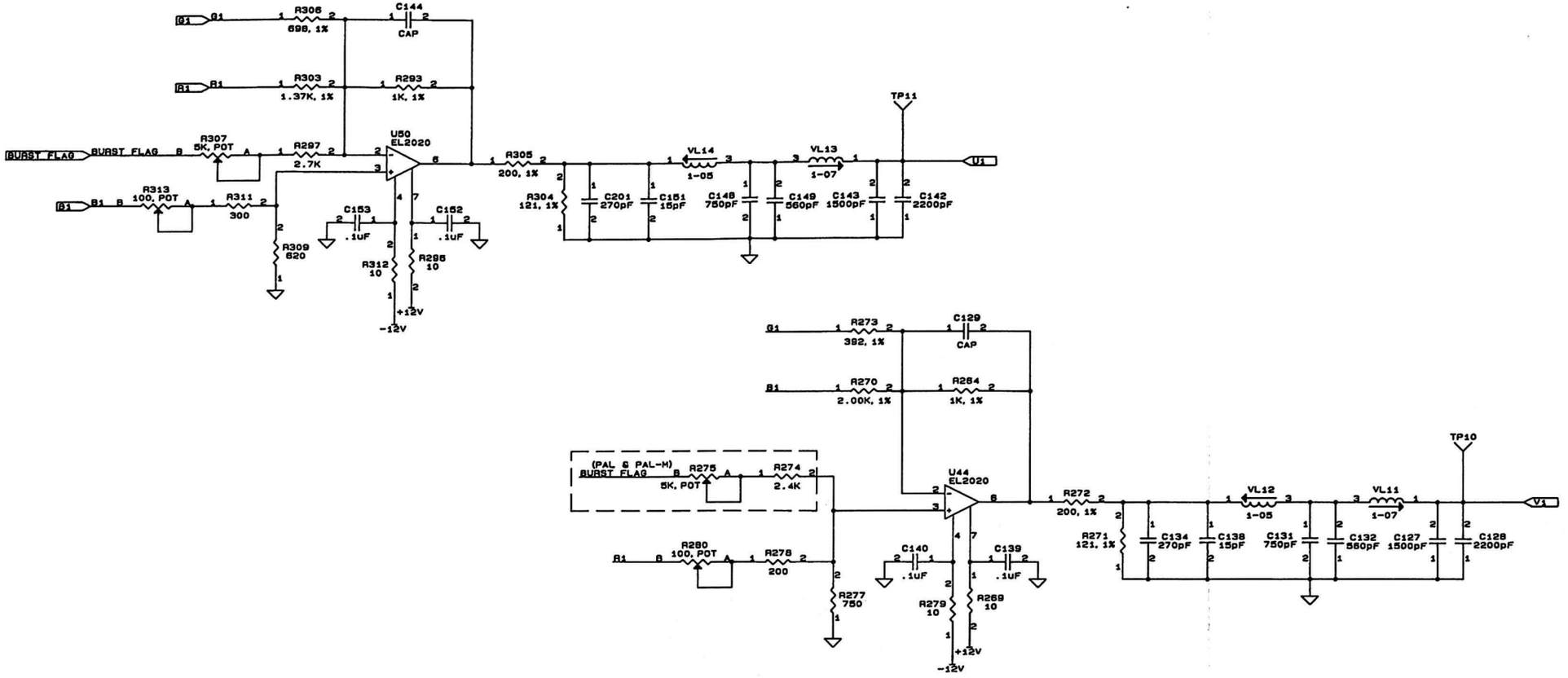

CHROMA MATRICES

5U= -.735R - 1.445G + 2.185B

5V= -3.075R - 2.575G - .500B

REV.	ENGRG CHANGE NO.	DWN	CHKD.	APP'D.	MO. DAY YR.
ORIGINAL ISSUE					12-07-90

CHYRON CORPORATION
5 Hub Drive
Melville, New York 11747

TITLE: ENCODER BOARD LOGICS

DOCUMENT NUMBER: 2A01514 REV D

SHEET 9 OF 11

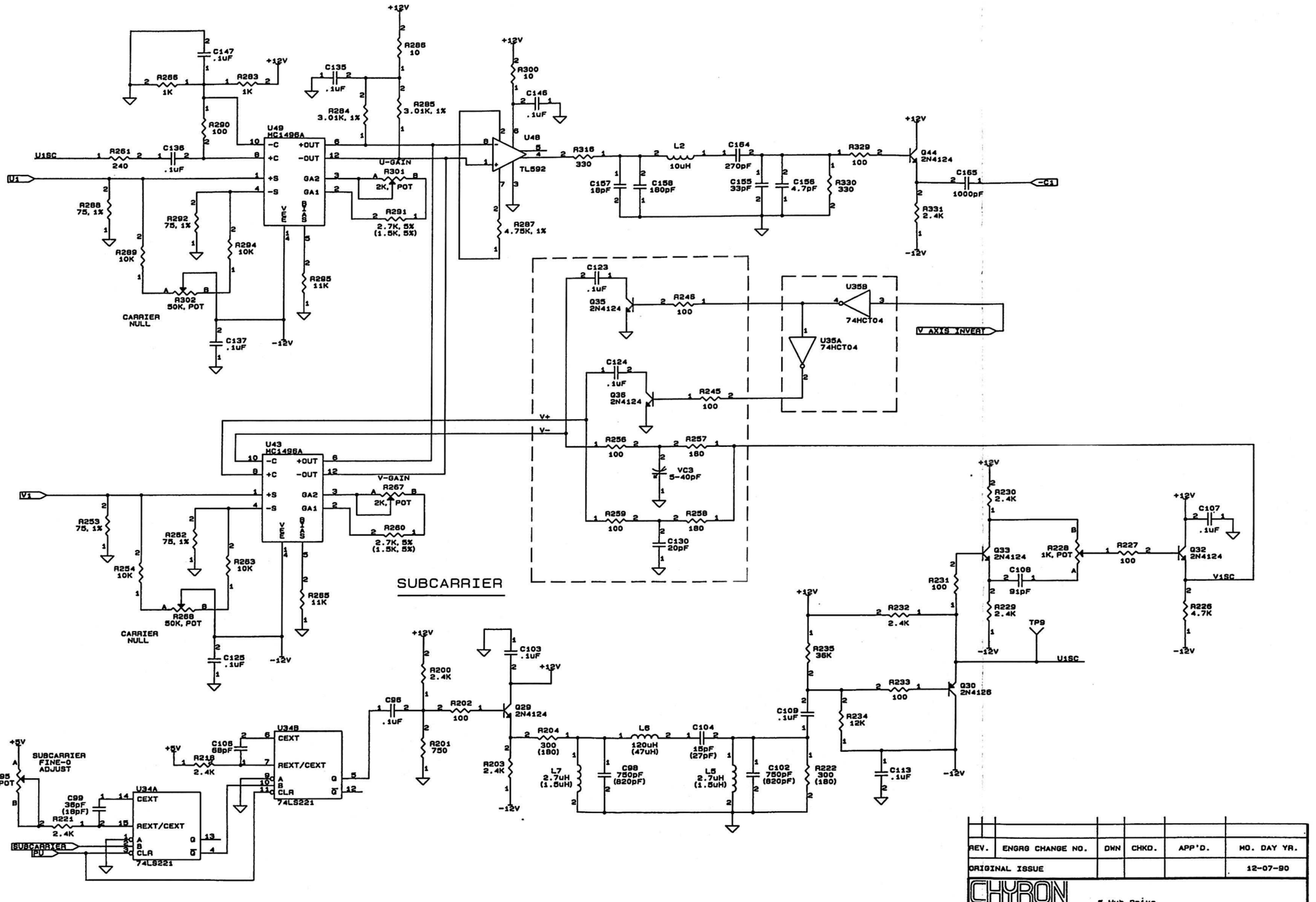

NOTE: VALUES IN PARENTHESES FOR PAL ONLY. USE NTSC VALUES FOR PAL-M.

REV.	ENGR8 CHANGE NO.	DWN	CHKD.	APP'D.	MO. DAY YR.
ORIGINAL ISSUE					12-07-90

CHYRON CORPORATION
5 Hub Drive
Melville, New York 11747

TITLE: ENCODER BOARD LOGICS

DOCUMENT NUMBER: 2A01514 REV D

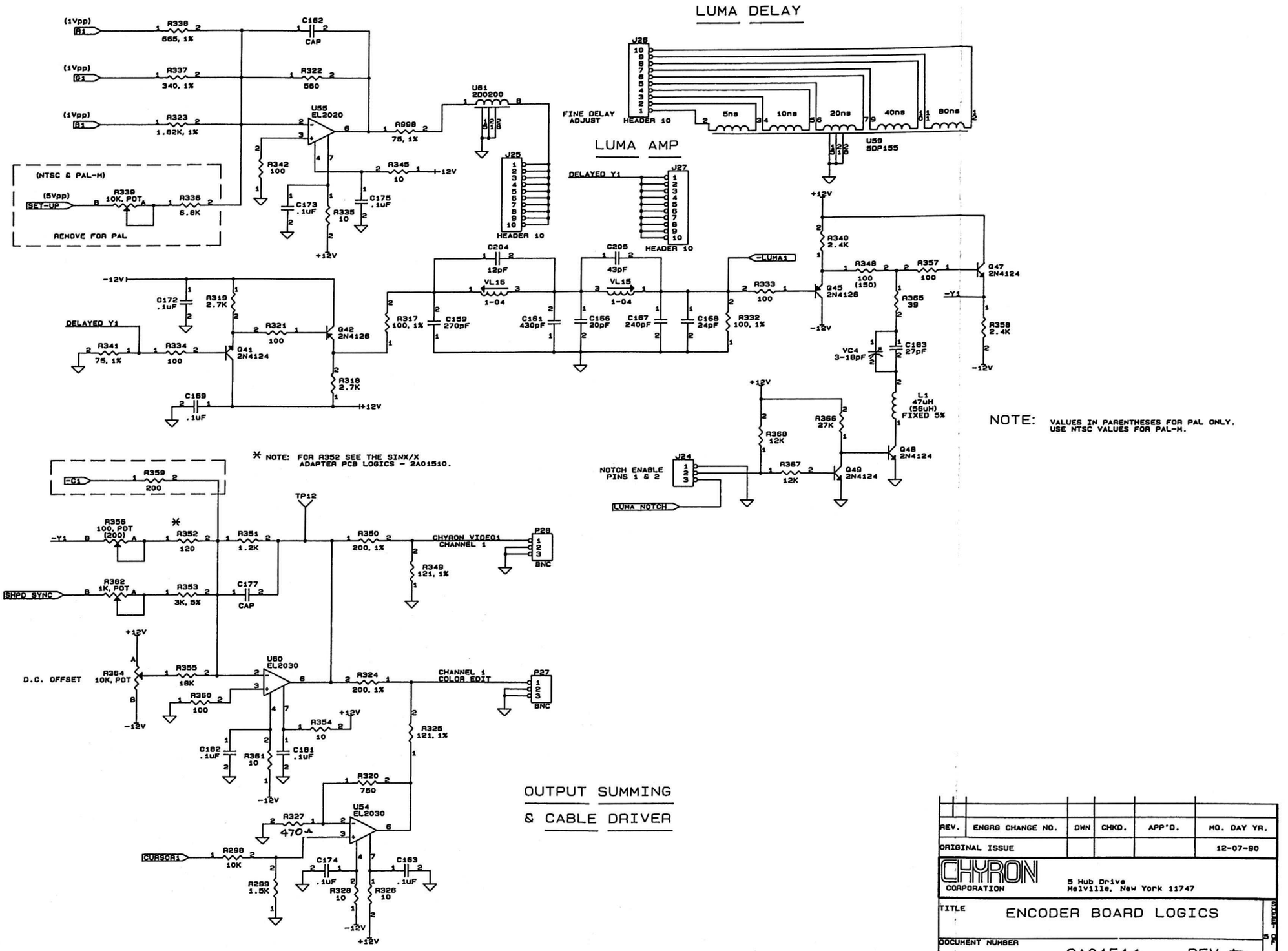

REV.	ENGRG CHANGE NO.	DWN	CHKD.	APP'D.	MO. DAY YR.
ORIGINAL ISSUE					12-07-90

CHYRON CORPORATION
5 Hub Drive
Melville, New York 11747

TITLE: ENCODER BOARD LOGICS

DOCUMENT NUMBER: 2A01514 REV D

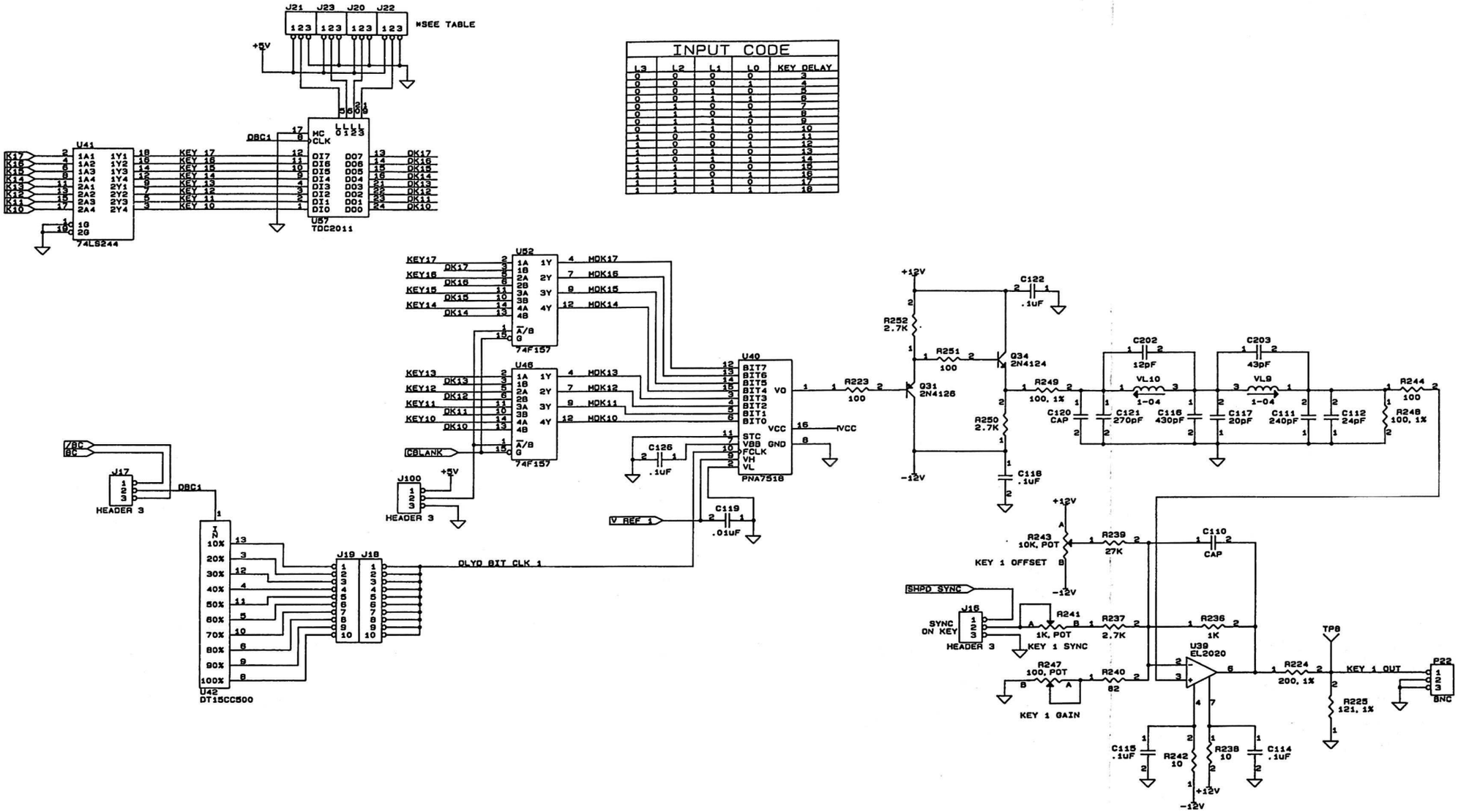

INPUT CODE

L3	L2	L1	L0	KEY DELAY
0	0	0	0	3
0	0	0	1	4
0	0	1	0	5
0	0	1	1	6
0	1	0	0	7
0	1	0	1	8
0	1	1	0	9
0	1	1	1	10
1	0	0	0	11
1	0	0	1	12
1	0	1	0	13
1	0	1	1	14
1	1	0	0	15
1	1	0	1	16
1	1	1	0	17
1	1	1	1	18

REV.	ENGRG CHANGE NO.	DWN	CHKD.	APP'D.	MO. DAY YR.
ORIGINAL ISSUE					12-07-90

CHYRON CORPORATION
5 Hub Drive
Melville, New York 11747

TITLE: ENCODER BOARD LOGICS

DOCUMENT NUMBER: 2A01514 REV D

SHEET 6 OF 11

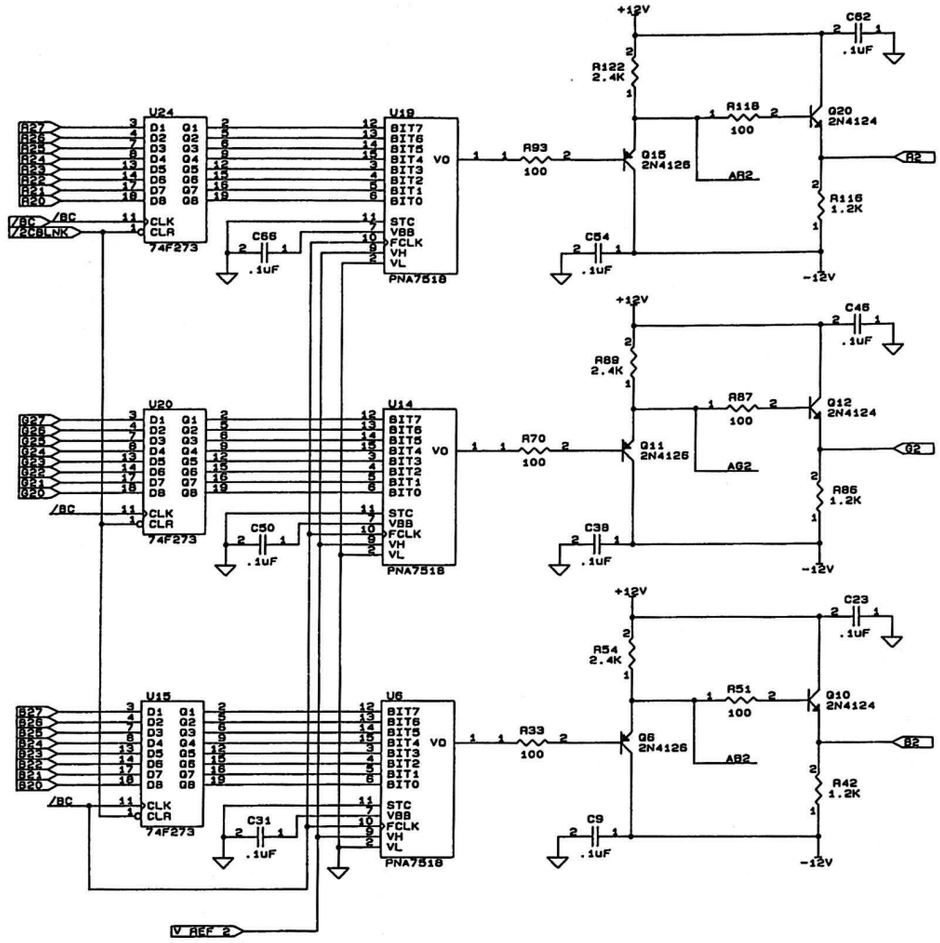

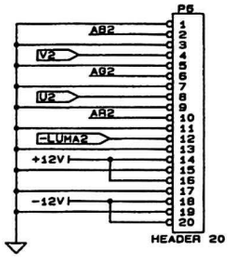

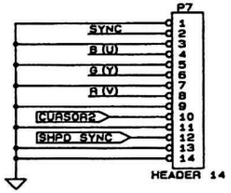

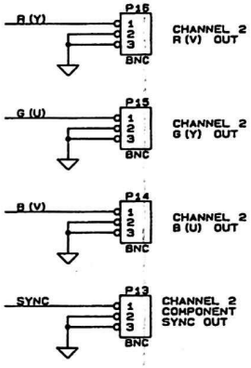

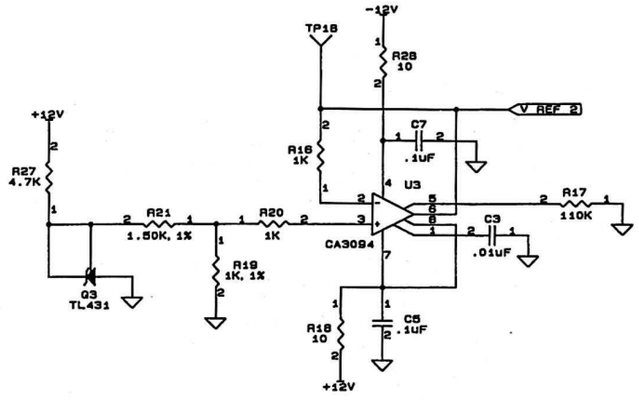

REV.	ENGRG CHANGE NO.	DWN	CHKD.	APP'D.	MO. DAY YR.
ORIGINAL ISSUE					12-07-90

CHYRON CORPORATION
5 Hub Drive
Melville, New York 11747

TITLE: ENCODER BOARD LOGICS

DOCUMENT NUMBER: 2A01514 REV D

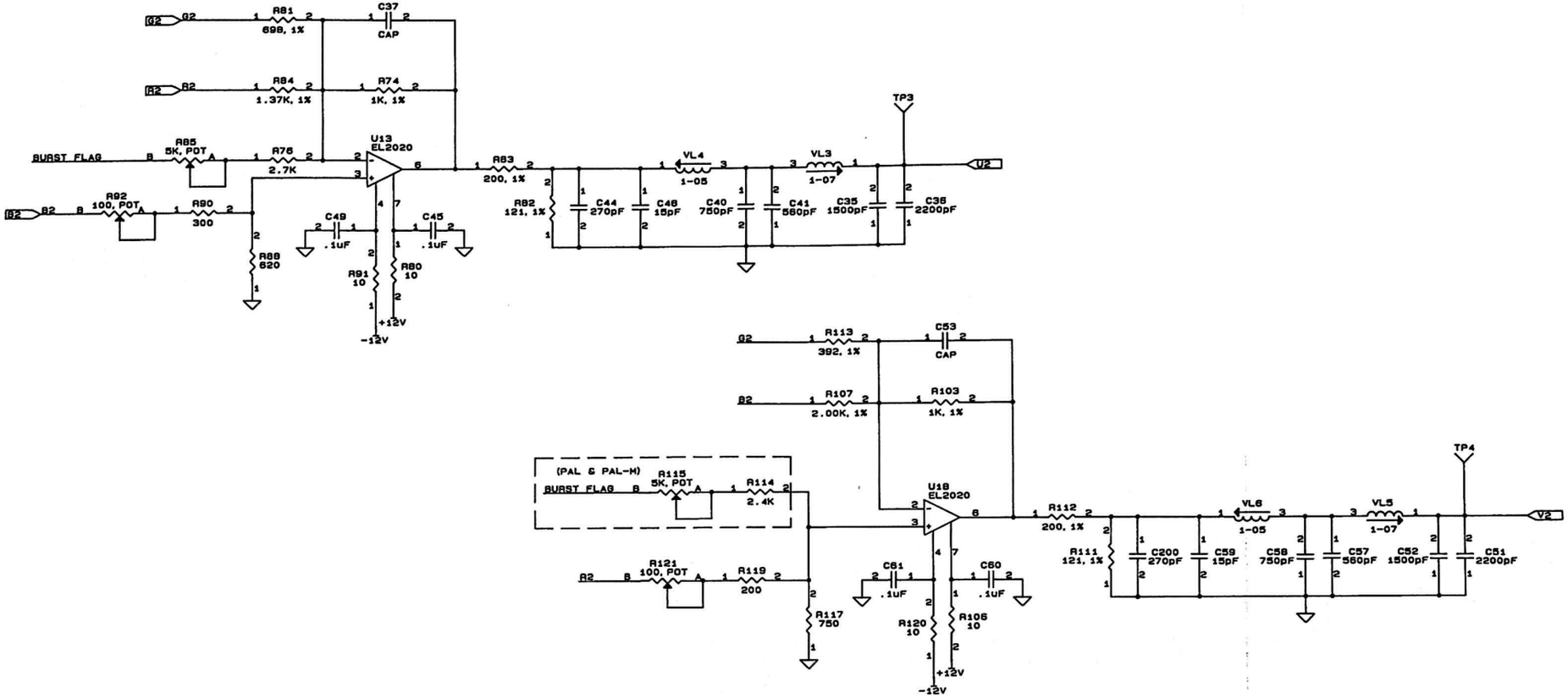

CHROMA MATRICES

5U= -.735R - 1.445G + 2.185B

5V= -3.075R - 2.575G - .500B

REV.	ENGRG CHANGE NO.	DWN	CHKD.	APP'D.	MO. DAY YR.
ORIGINAL ISSUE					12-07-90

CHYRON CORPORATION
5 Hub Drive
Melville, New York 11747

TITLE: ENCODER BOARD LOGICS

DOCUMENT NUMBER: 2A01514 REV D

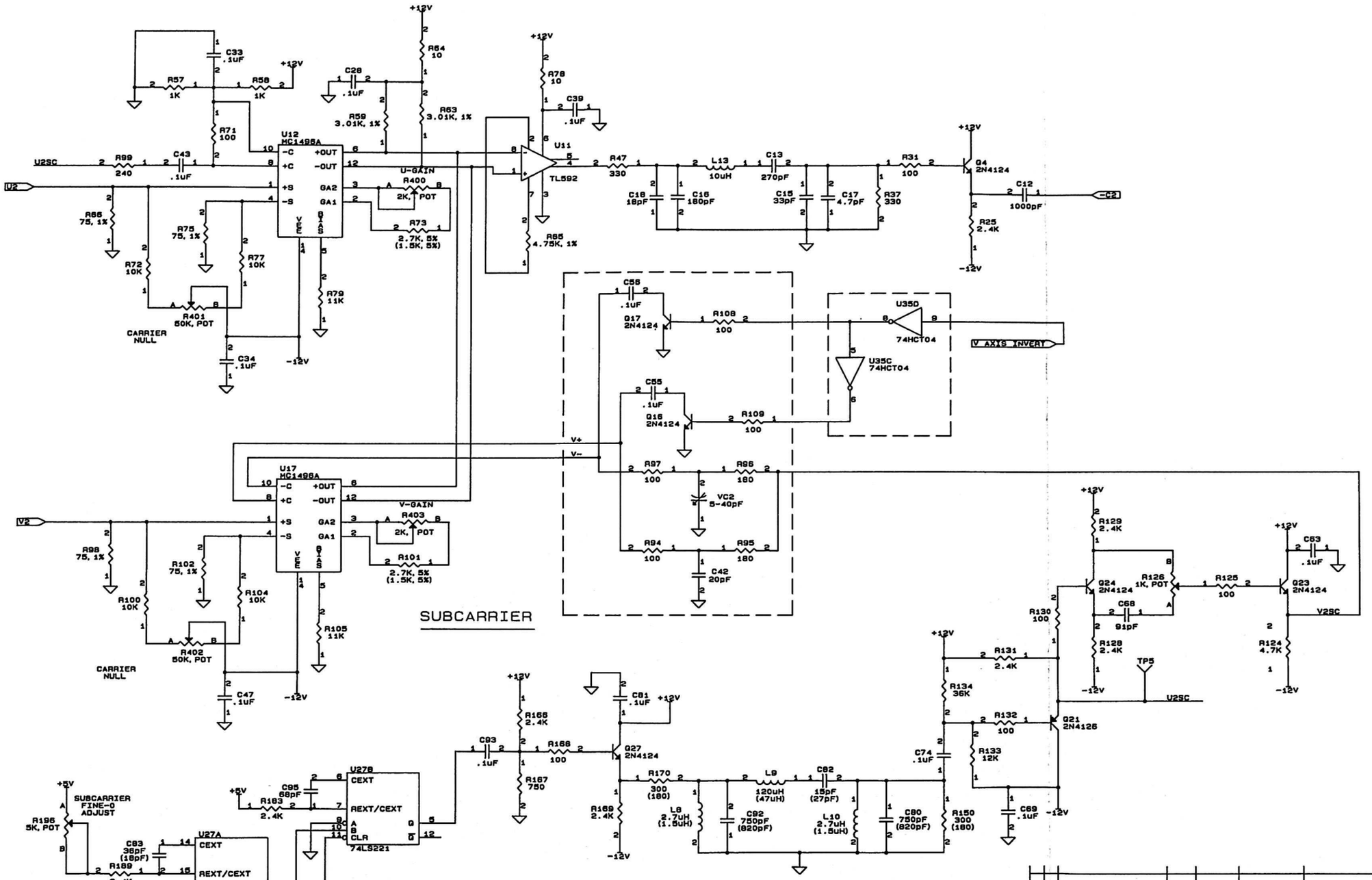

REV.	ENGRG CHANGE NO.	DWN	CHKD.	APP'D.	MO. DAY YR.
ORIGINAL ISSUE					12-07-90

CHYRON CORPORATION
5 Hub Drive
Melville, New York 11747

TITLE: ENCODER BOARD LOGICS

DOCUMENT NUMBER: 2A01514 REV D

SHEET 9 OF 11

LUMA DELAY

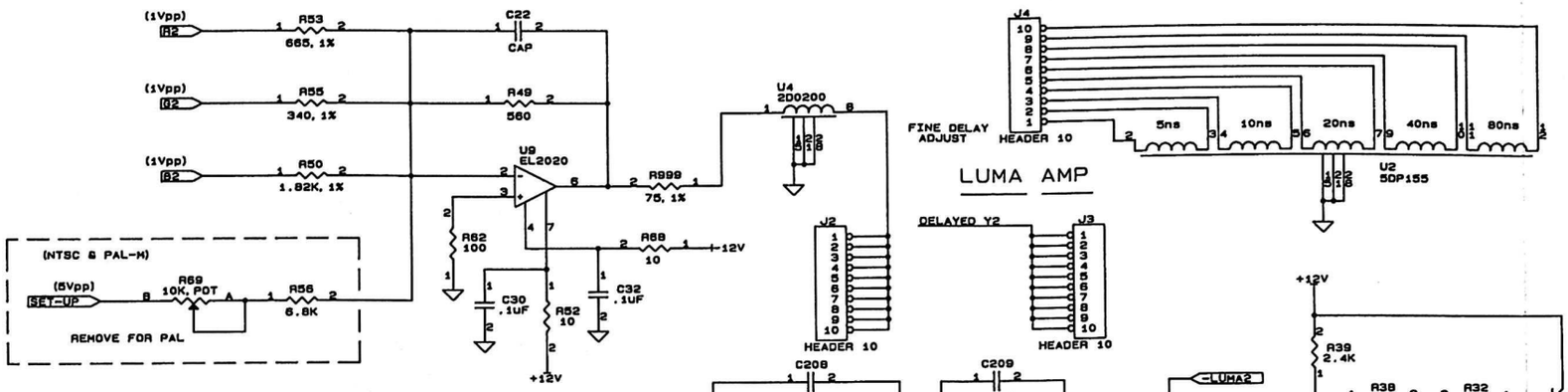

LUMA AMP

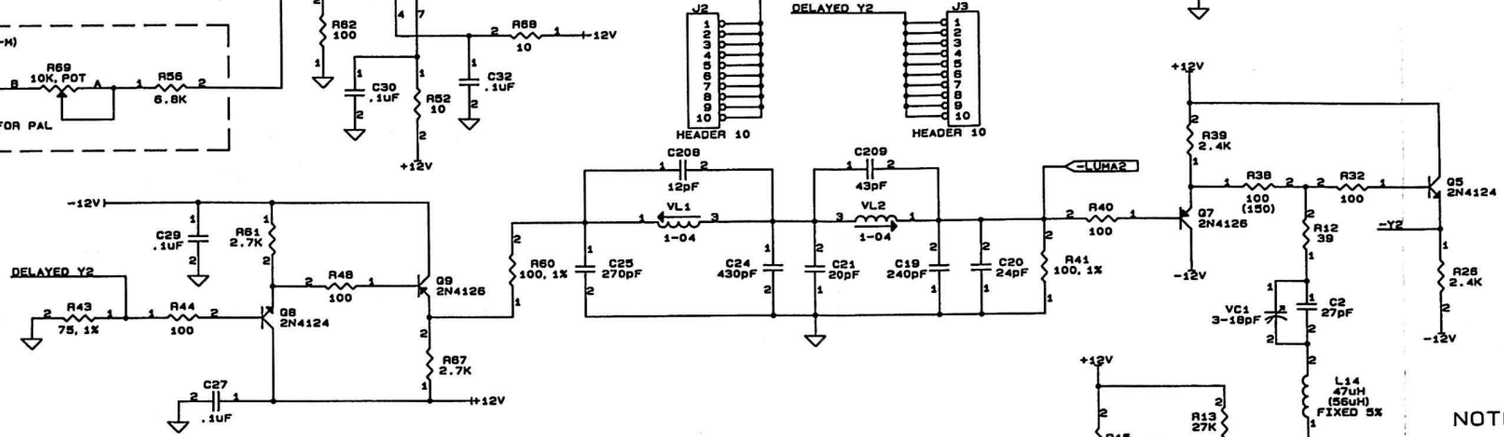

NOTE: VALUES IN PARENTHESES FOR PAL ONLY. USE NTSC VALUES FOR PAL-M.

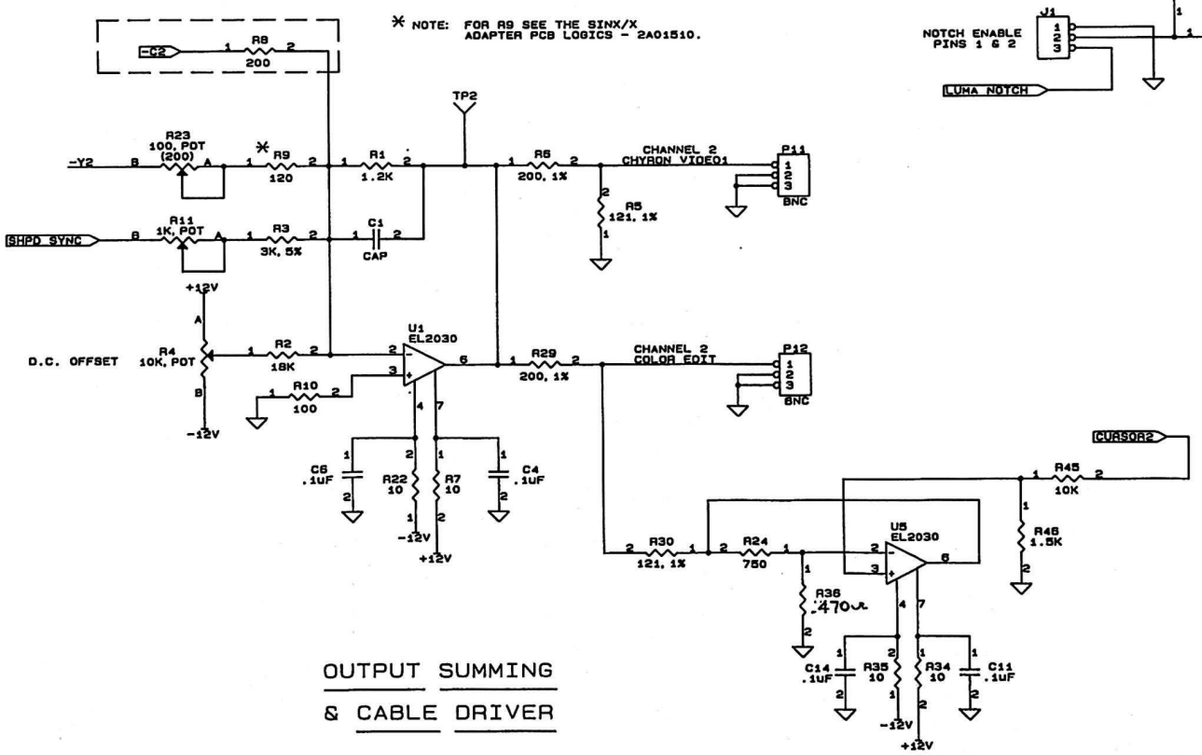

OUTPUT SUMMING & CABLE DRIVER

REV.	ENGRG CHANGE NO.	DWN	CHKD.	APP'D.	MO. DAY YR.
ORIGINAL ISSUE					12-07-90

CHYRON CORPORATION
5 Hub Drive
Melville, New York 11747

TITLE: ENCODER BOARD LOGICS

DOCUMENT NUMBER: 2A01514 REV D

SIZE D

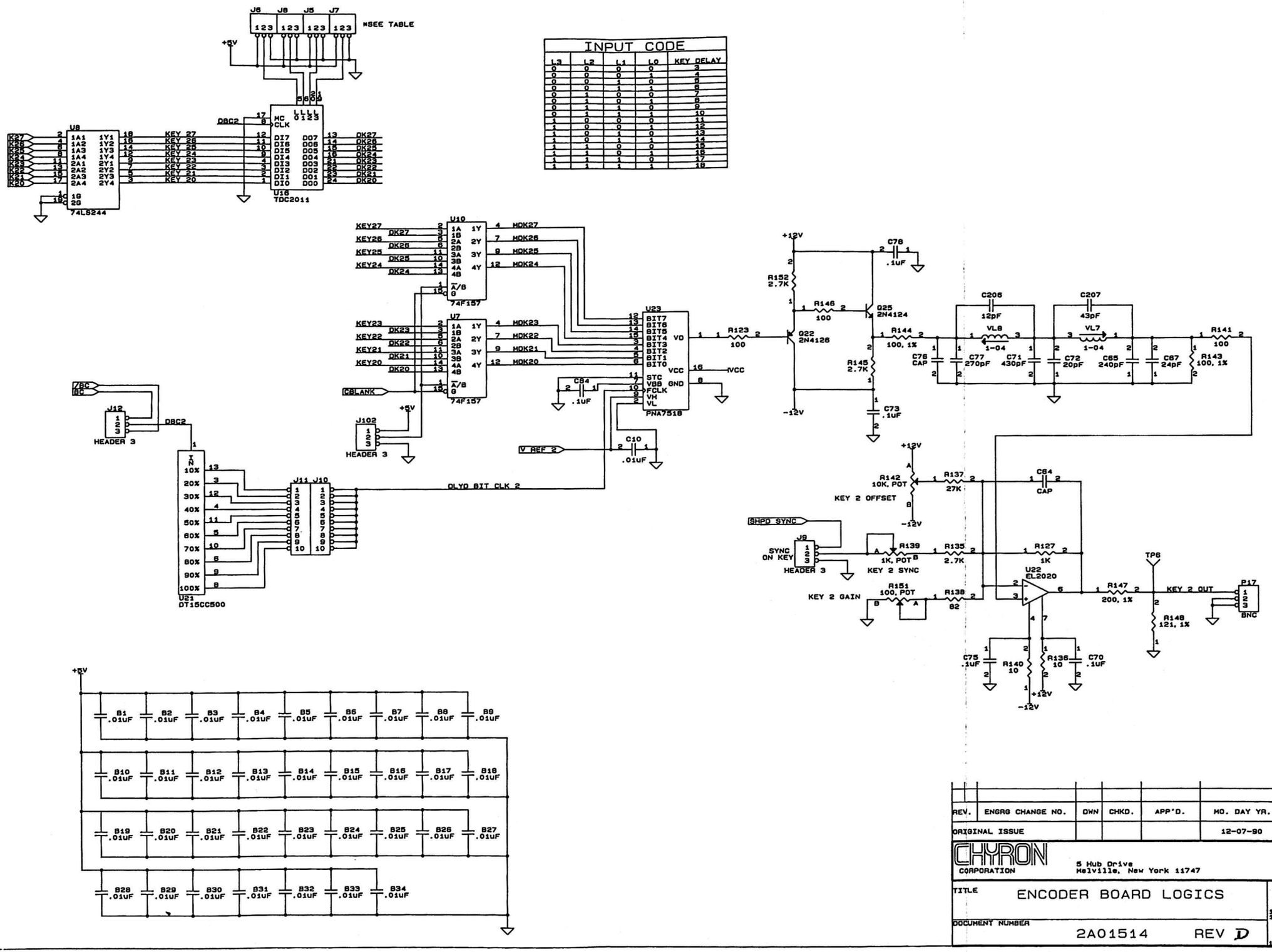

INPUT CODE				
L3	L2	L1	L0	KEY DELAY
0	0	0	0	3
0	0	0	1	4
0	0	1	0	5
0	0	1	1	6
0	1	0	0	7
0	1	0	1	8
0	1	1	0	9
0	1	1	1	10
1	0	0	0	11
1	0	0	1	12
1	0	1	0	13
1	0	1	1	14
1	1	0	0	15
1	1	0	1	16
1	1	1	0	17
1	1	1	1	18

REV.	ENGRG CHANGE NO.	DWN	CHKD.	APP'D.	MO. DAY YR.
ORIGINAL ISSUE					12-07-90

CHYRON CORPORATION
5 Hub Drive
Melville, New York 11747

TITLE: ENCODER BOARD LOGICS

DOCUMENT NUMBER: 2A01514 REV D

VSB CONNECTIONS

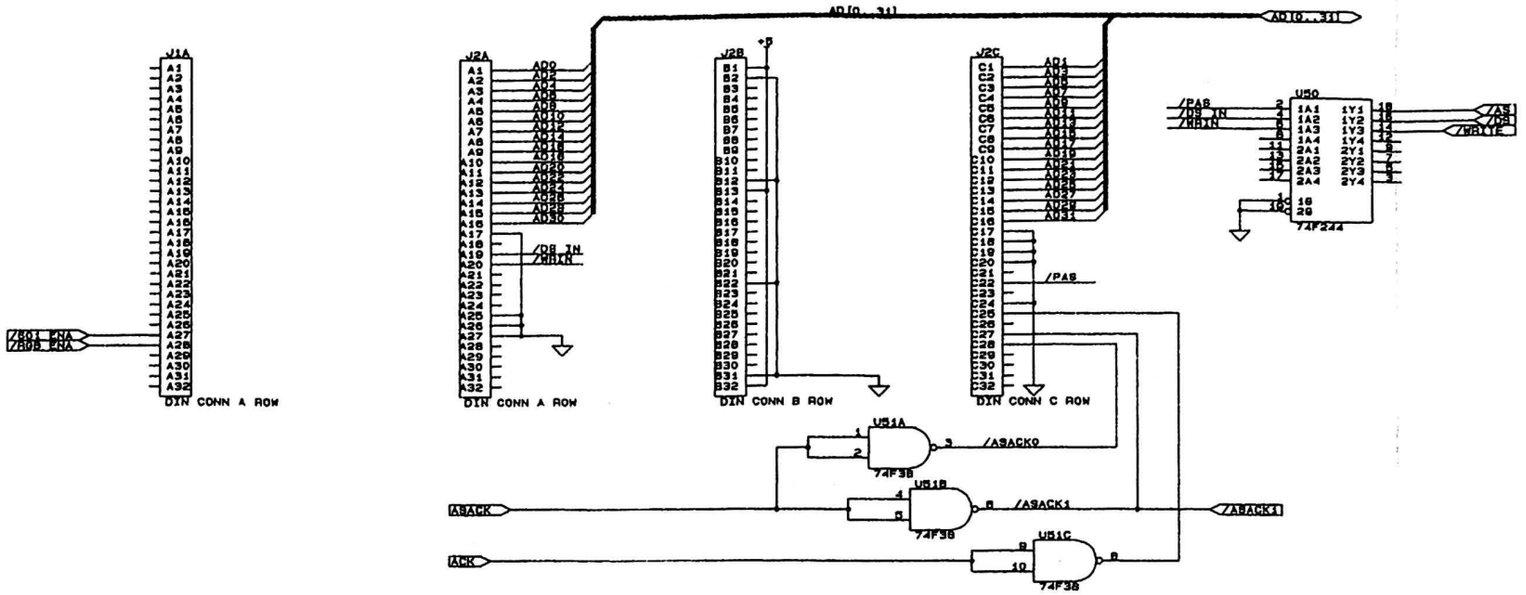

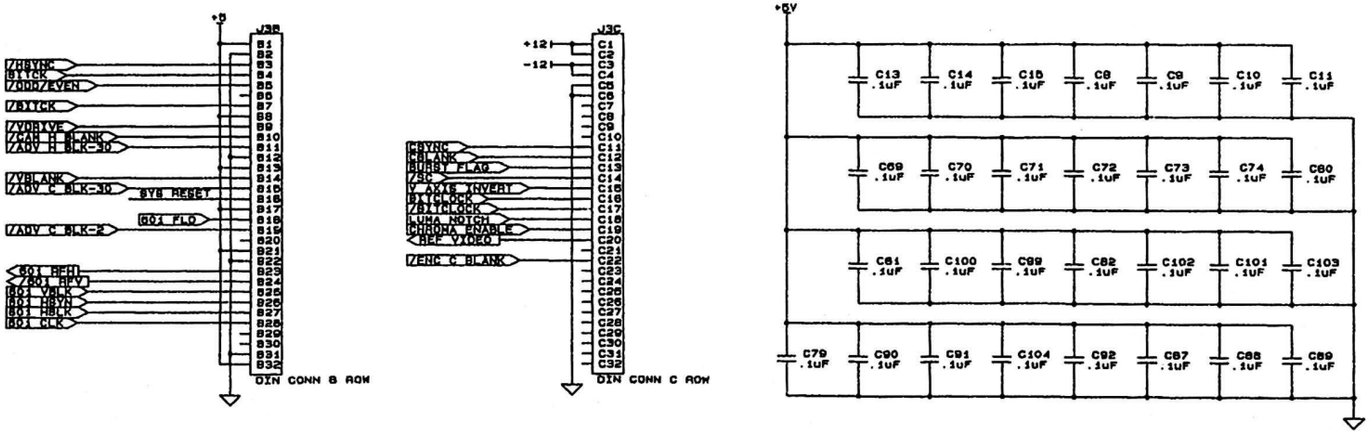

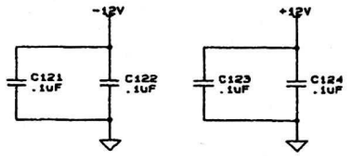

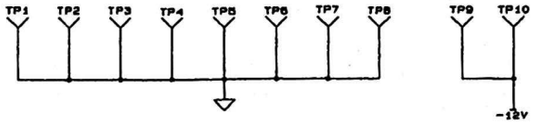

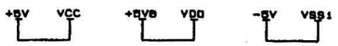

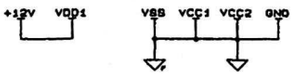

REV.	ENGRG CHANGE NO.	DWN	CHKD.	APP'D.	MO. DAY YR.
ORIGINAL ISSUE					3-17-92

CHYRON CORPORATION
5 Hub Drive
Melville, New York 11747

TITLE: LOGICS-SYNC GEN II BOARD FOR INFINIT! /MAX! >

DOCUMENT NUMBER: 2A01572 REV G

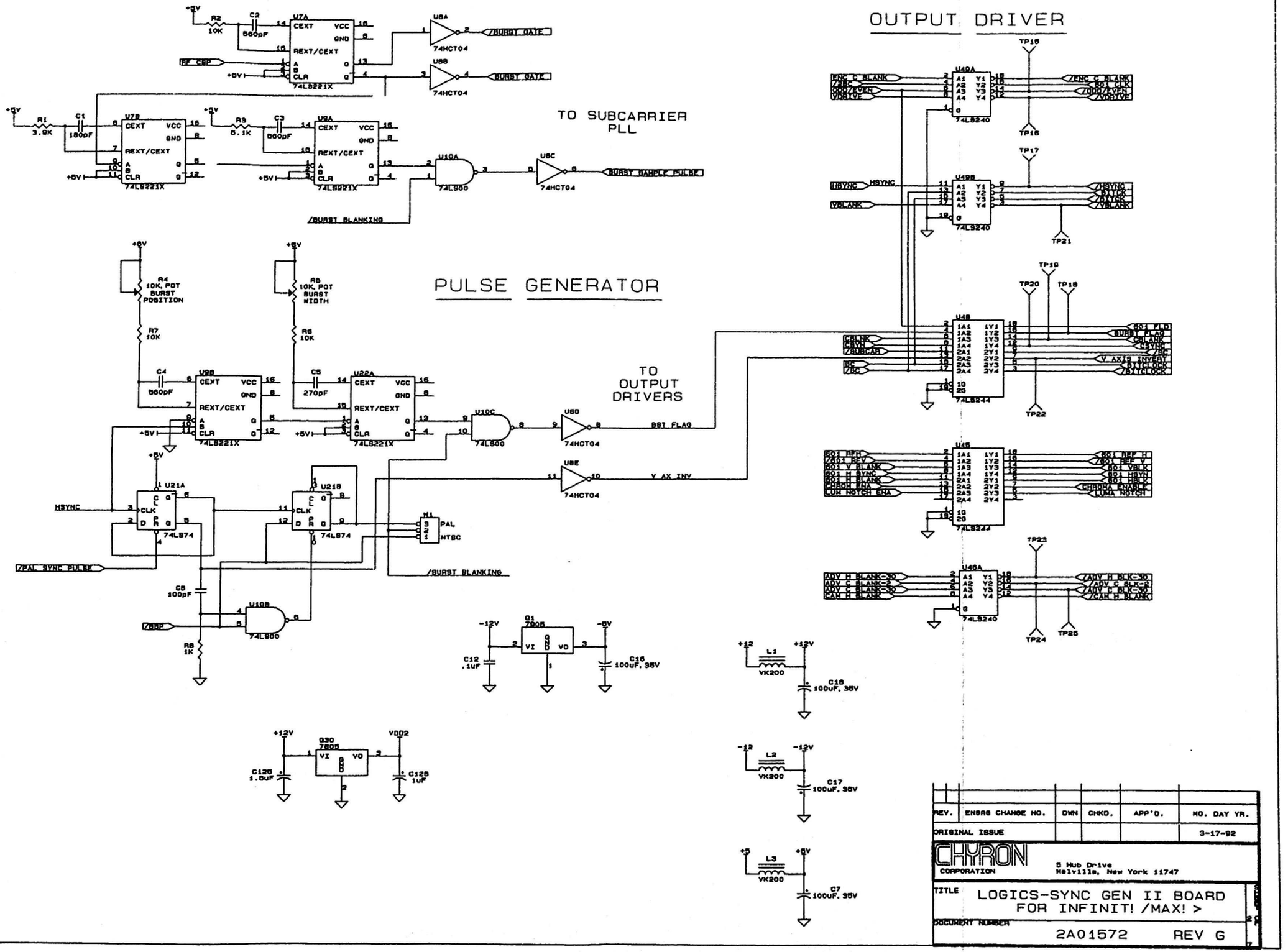

REV.	ENGR CHANGE NO.	DWN	CHKD.	APP'D.	MO. DAY YR.
ORIGINAL ISSUE					3-17-92

CHYRON CORPORATION
5 Hub Drive
Melville, New York 11747

TITLE: LOGICS-SYNC GEN II BOARD FOR INFINIT! /MAX! >

DOCUMENT NUMBER: 2A01572 REV G

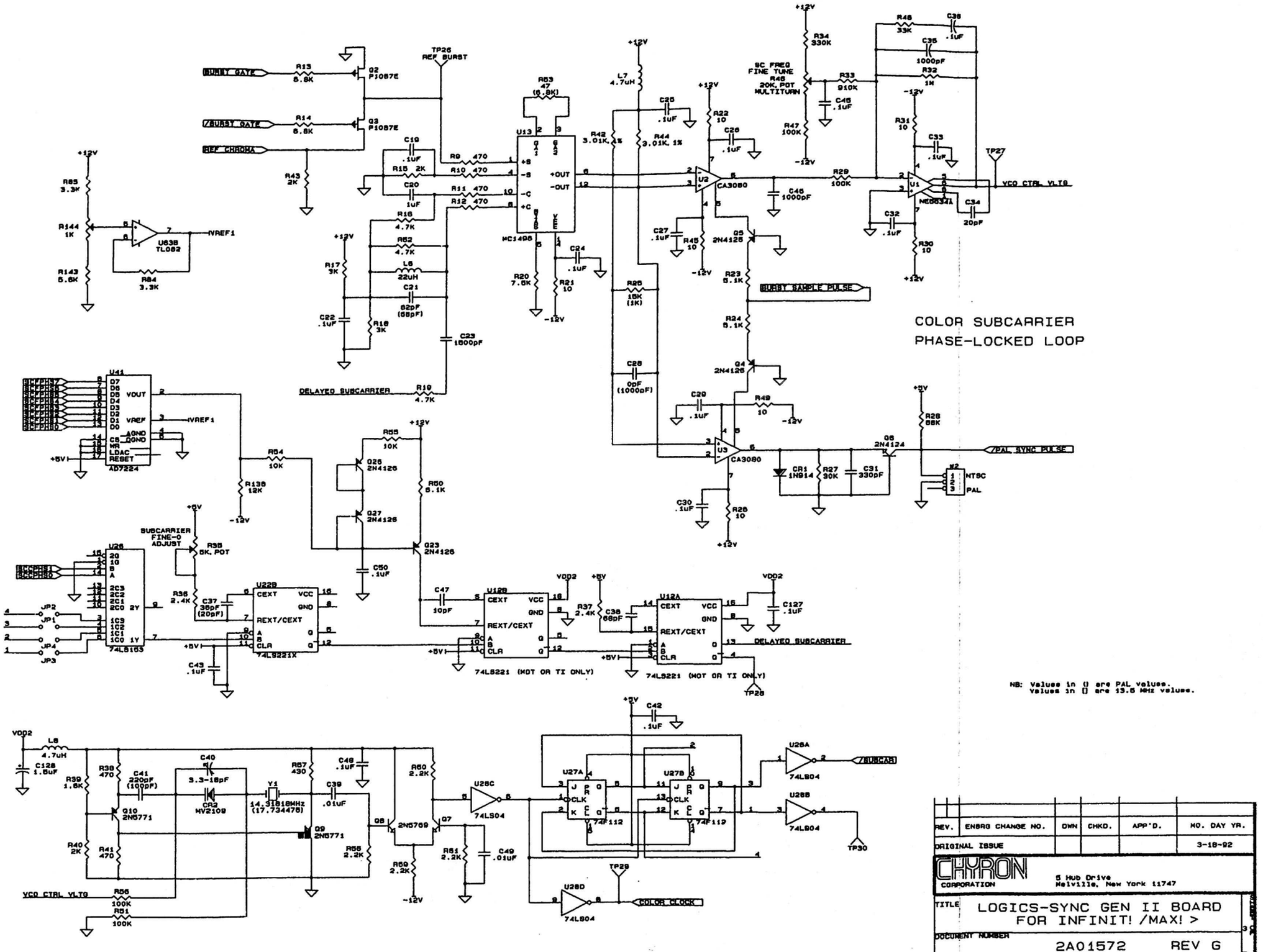
COLOR SUBCARRIER
PHASE-LOCKED LOOP
BURST GATE
/BURST GATE
REF CHROMA
TP26 REF BURST
SC FREQ FINE TUNE R46 20K, POT MULTITURN
BURST SAMPLE PULSE
DELAYED SUBCARRIER
/PAL SYNC PULSE
VCO CTL VLTG
NTSC
PAL
SUBCARRIER FINE-O ADJUST
74LS221 (MOT OR TI ONLY)
74LS221 (MOT OR TI ONLY)
COLOR CLOCK
/SUBCAR
NB: Values in () are PAL values.
Values in [] are 13.5 MHz values.
CHYRON CORPORATION
5 Hub Drive
Melville, New York 11747
TITLE
LOGICS-SYNC GEN II BOARD
FOR INFINIT! /MAX! >
DOCUMENT NUMBER
2A01572 REV G
REV. ENGRG CHANGE NO. DWN CHKD. APP'D. NO. DAY YR.
ORIGINAL ISSUE 3-18-92

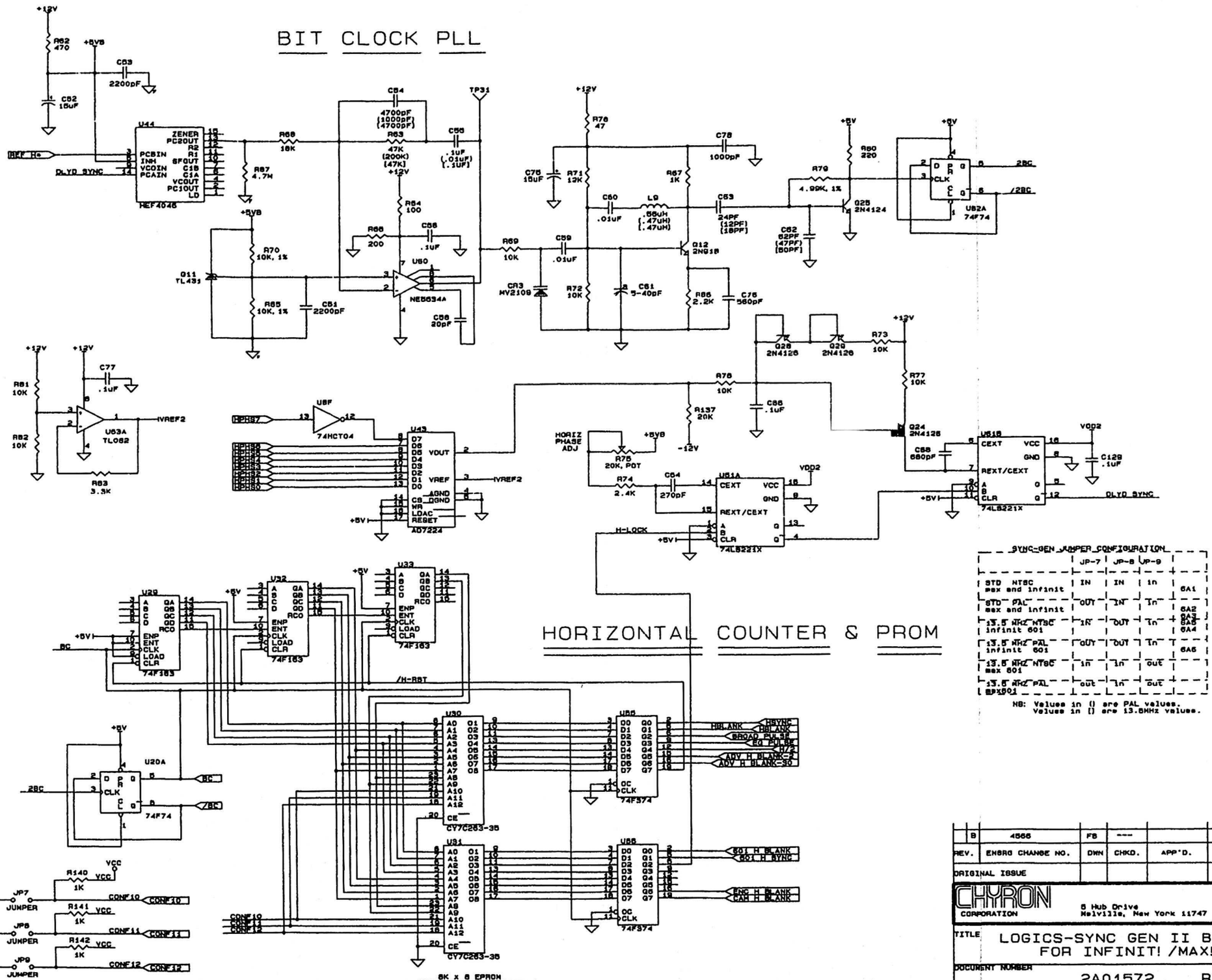
BIT CLOCK PLL
HORIZONTAL COUNTER & PROM
SYNC-GEN JUMPER CONFIGURATION
JP-7 JP-8 JP-9
STD NTSC max and infinit IN IN in 6A1
STD PAL max and infinit OUT IN In 6A2
13.5 MHz NTSC infinit 601 IN OUT In 6A3 6A4
13.5 MHz PAL infinit 601 OUT OUT In 6A5
13.5 MHz NTSC max 601 in in out
13.5 MHz PAL max 601 out in out
NB: Values in () are PAL values.
Values in [] are 13.5MHz values.
8K x 8 EPROM
ORCAD PART IS A "76641"
CHYRON CORPORATION
5 Hub Drive
Melville, New York 11747
LOGICS-SYNC GEN II BOARD
FOR INFINIT! /MAX! >
2A01572 REV G

VERTICAL COUNTER & PROM

COMPOSITE LOGIC

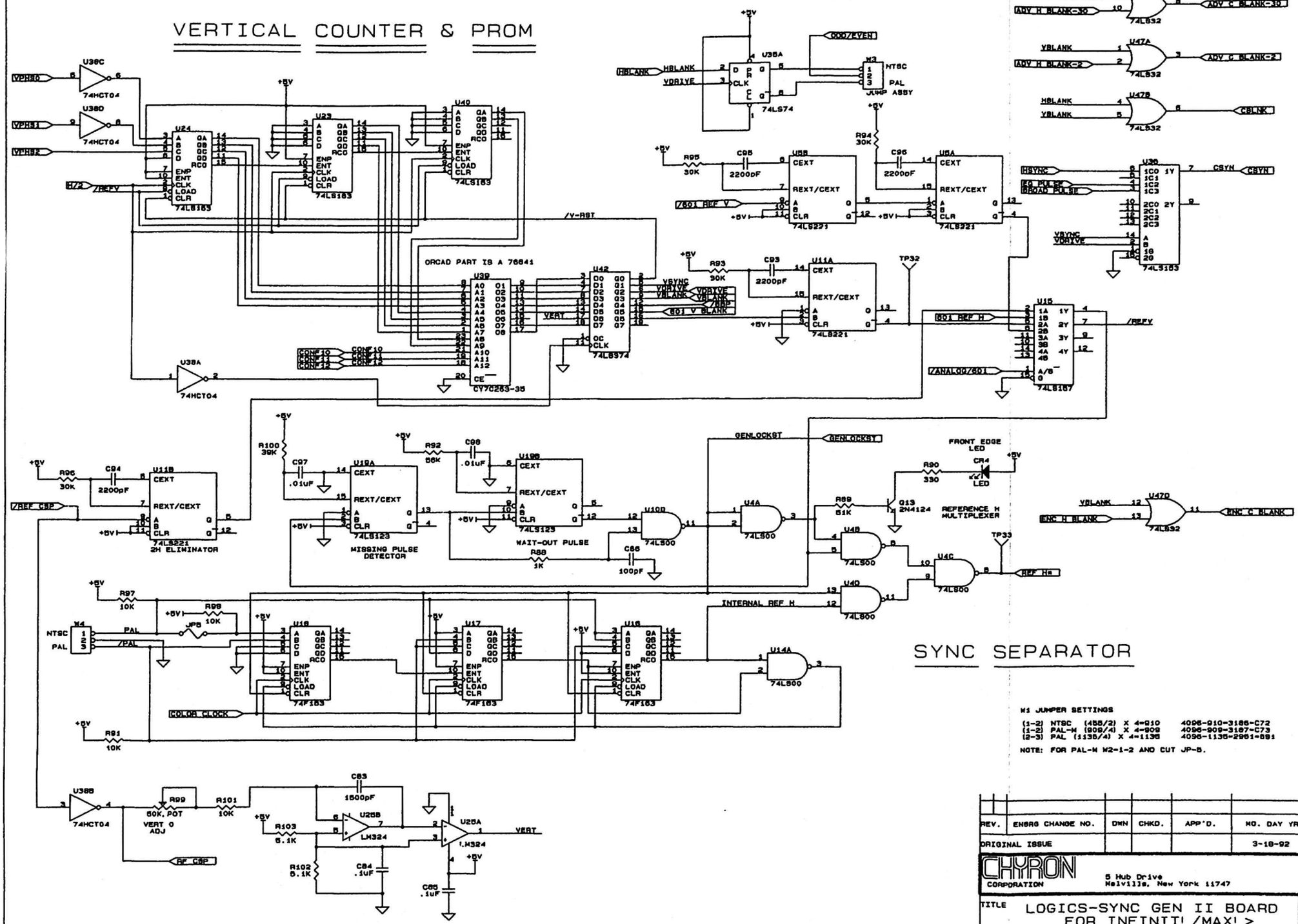

SYNC SEPARATOR

W1 JUMPER SETTINGS

(1-2) NTSC	(455/2) X 4=910	4096-910-3186-C72
(1-2) PAL-M	(909/4) X 4=909	4096-909-3187-C73
(2-3) PAL	(1135/4) X 4=1136	4096-1136-2961-881

NOTE: FOR PAL-M W2-1-2 AND CUT JP-5.

REV.	ENGRG CHANGE NO.	DWN	CHKD.	APP'D.	NO. DAY YR.
ORIGINAL ISSUE					3-18-92

CHYRON CORPORATION
5 Hub Drive
Melville, New York 11747

TITLE: LOGICS-SYNC GEN II BOARD FOR INFINIT! /MAX! >

DOCUMENT NUMBER: 2A01572 REV G

SYNC STRIPPER

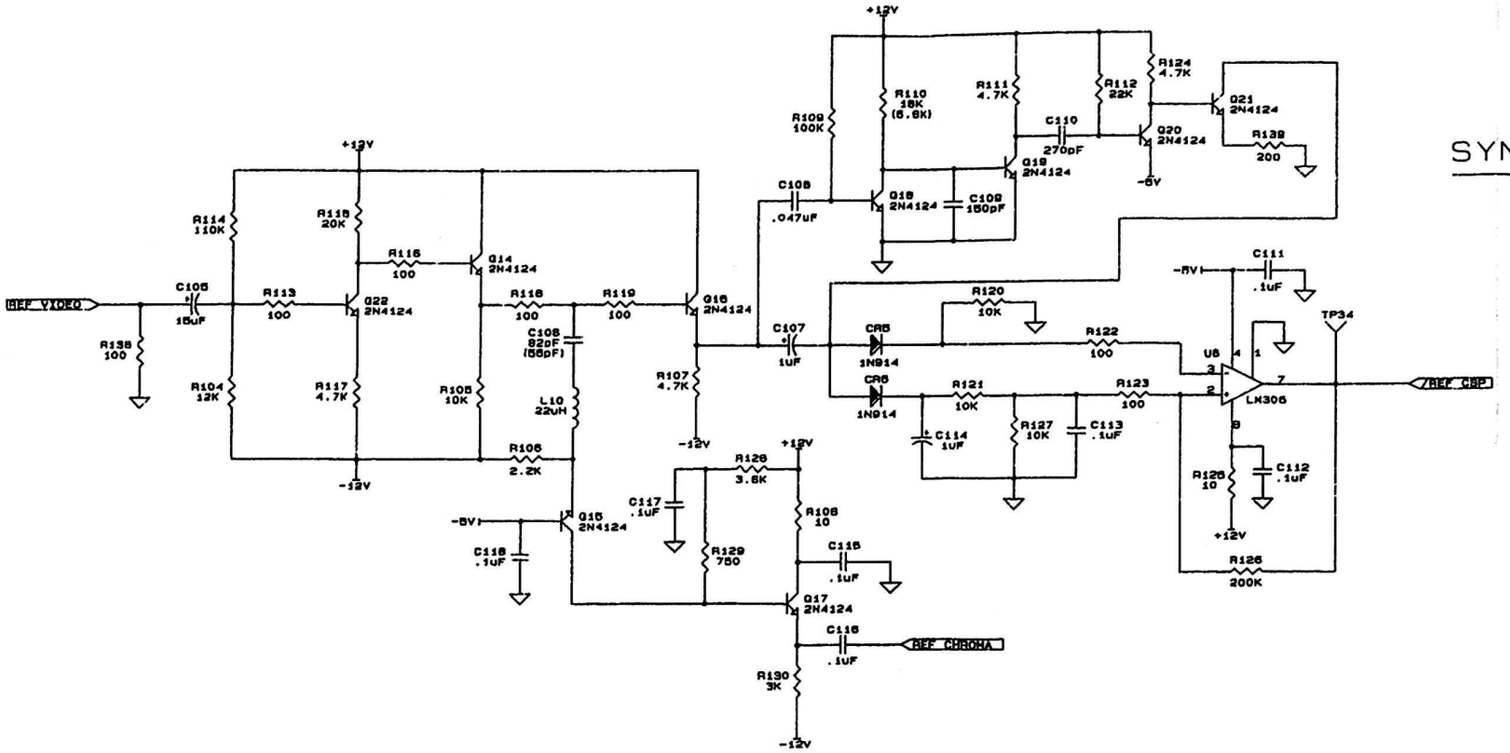

WHITE DETECT

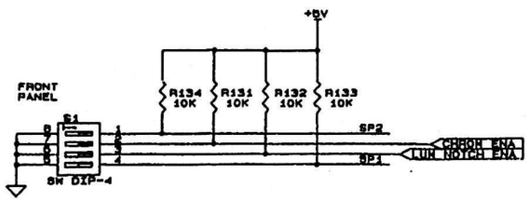

REV.	ENGRG CHANGE NO.	DWN	CHKD.	APP'D.	MO. DAY YR.
ORIGINAL ISSUE					3-18-92

CHYRON CORPORATION
6 Hub Drive
Melville, New York 11747

TITLE: LOGICS-SYNC GEN II BOARD FOR INFINIT! /MAX! >

DOCUMENT NUMBER: 2A01572 REV G

STATUS BUFFER

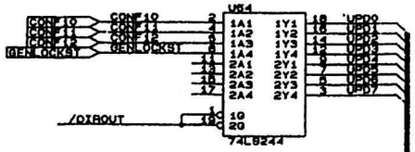

VSB INPUT DATA BUFFERS

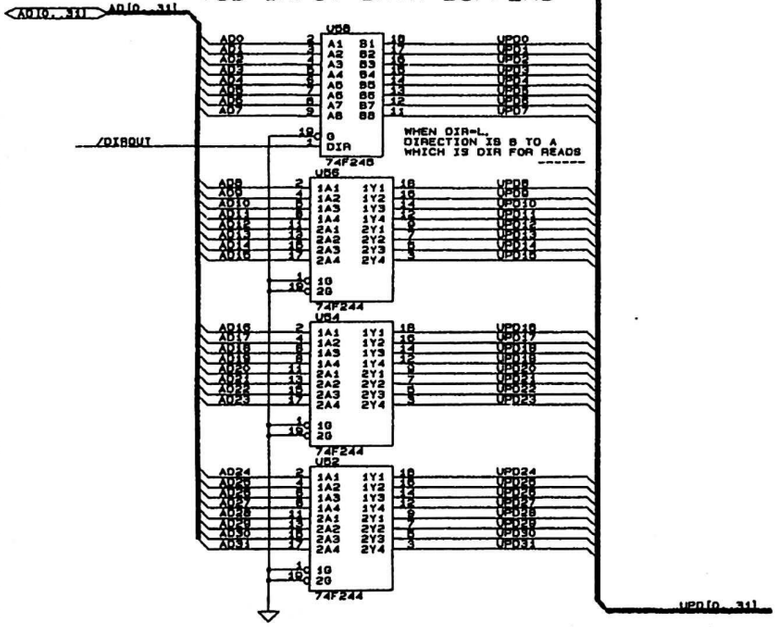

VSB INPUT ADDRESS REGISTERS

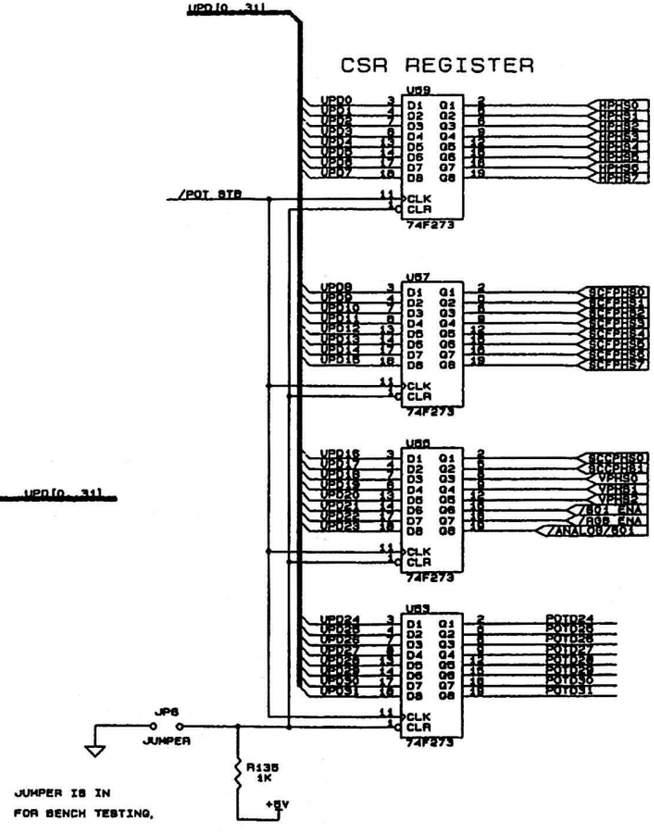

PIN 22 IS /ENABLE

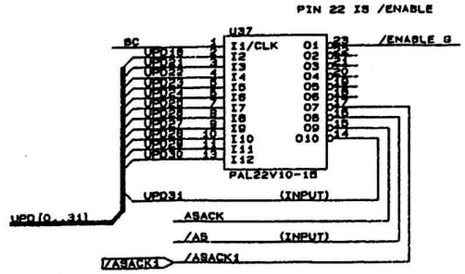

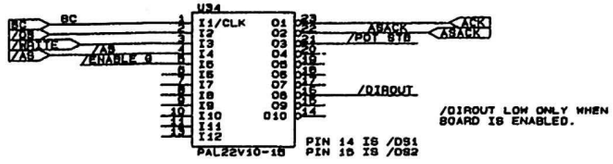

/DIROUT LOW ONLY WHEN BOARD IS ENABLED.

VSB PAL 2

CSR REGISTER

REV.	ENGR CHANGE NO.	DWN	CHKD.	APP'D.	NO. DAY YR.
ORIGINAL ISSUE					3-18-92

CHYRON CORPORATION
5 Hub Drive
Melville, New York 11747

TITLE: LOGICS-SYNC GEN II BOARD FOR INFINIT! /MAX! >

DOCUMENT NUMBER: 2A01572 REV G

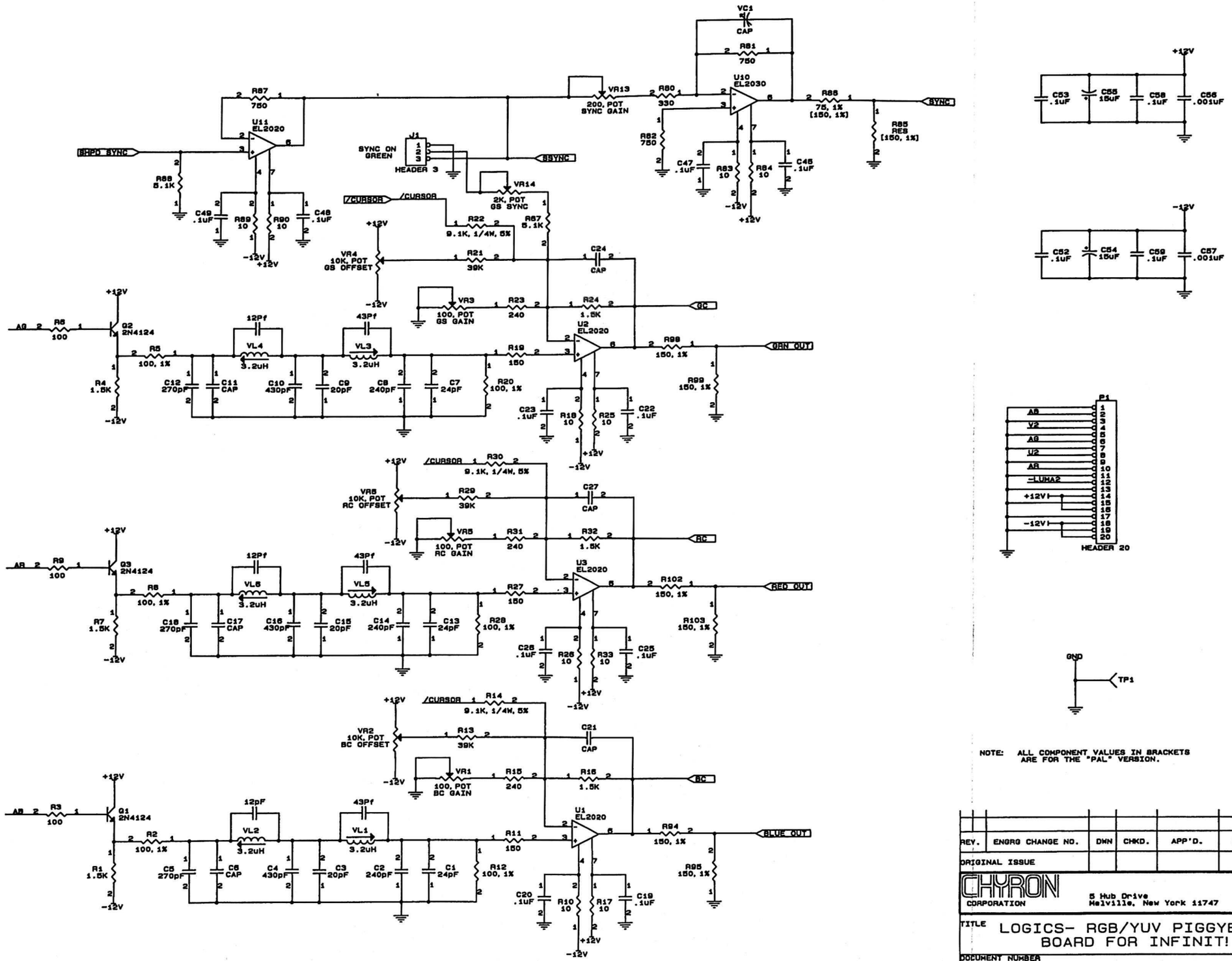

NOTE: ALL COMPONENT VALUES IN BRACKETS ARE FOR THE "PAL" VERSION.

REV.	ENGRG CHANGE NO.	DWN	CHKD.	APP'D.	MO. DAY YR.
ORIGINAL ISSUE					03-15-91

CHYRON CORPORATION
5 Hub Drive
Melville, New York 11747

TITLE: LOGICS- RGB/YUV PIGGYBACK BOARD FOR INFINIT!

DOCUMENT NUMBER: 2A01345 REV B

SHEET 1 OF 2

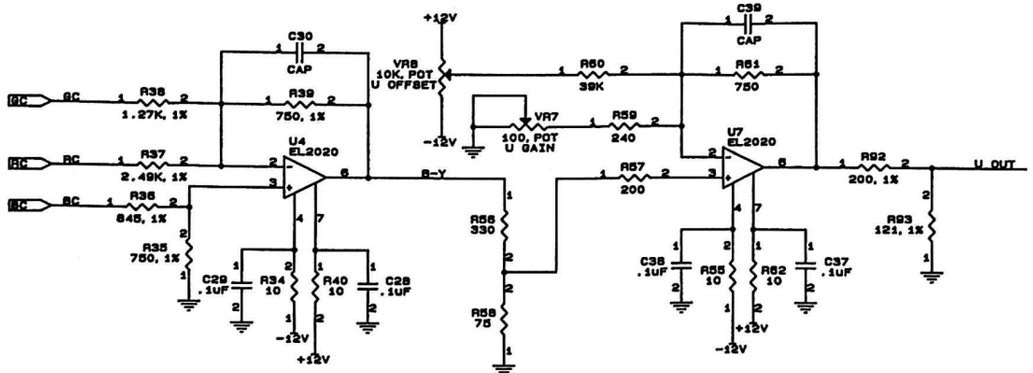

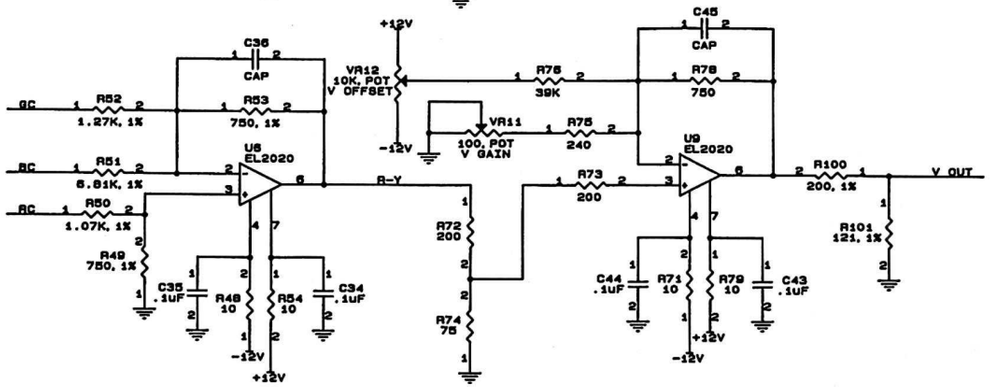

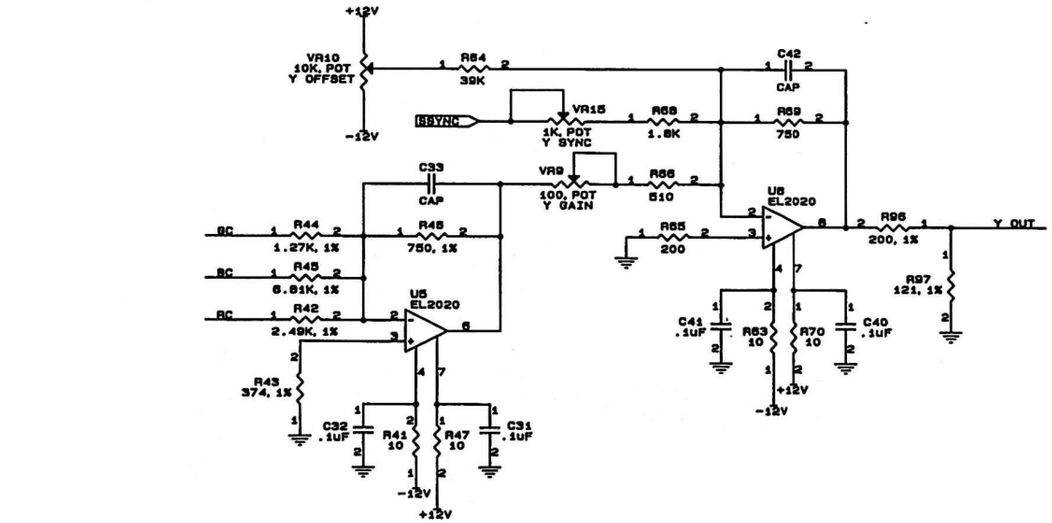

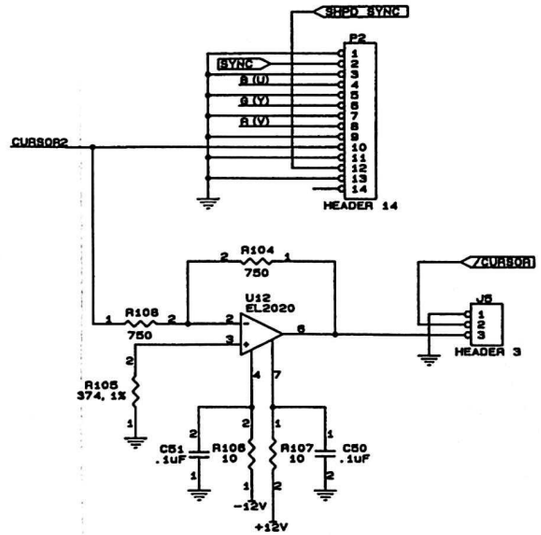

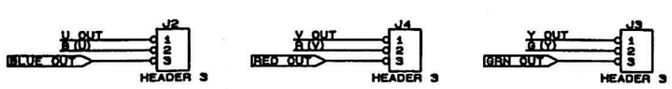

REV.	ENGRG CHANGE NO.	DWN	CHKD.	APP'D.	MO. DAY YR.
ORIGINAL ISSUE					03-15-91

CHYRON CORPORATION
5 Hub Drive
Melville, New York 11747

TITLE: LOGICS- RGB/YUV PIGGYBACK BOARD FOR INFINIT!

DOCUMENT NUMBER: 2A01345 REV B

SHEET 2 OF 2

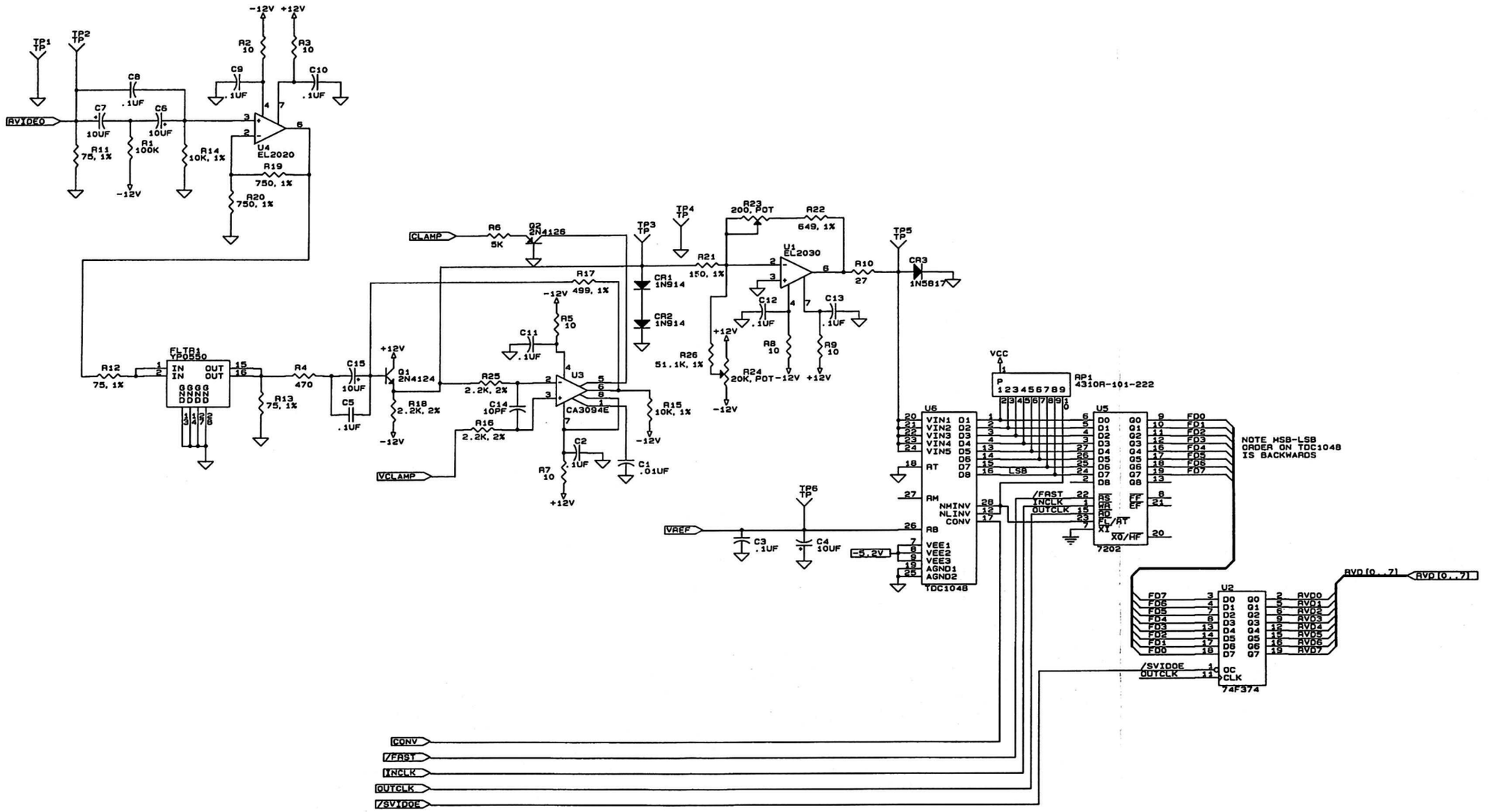

REV.	ENGRG CHANGE NO.	DWN	CHKD.	APP'D.	MO. DAY YR.
ORIBINAL ISSUE		MM			05-23-91

CHYRON CORPORATION
5 Hub Drive
Melville, New York 11747

TITLE
RED VIDEO A/D
CAMERA CAPTURE BOARD

DOCUMENT NUMBER
2A01542 REV A

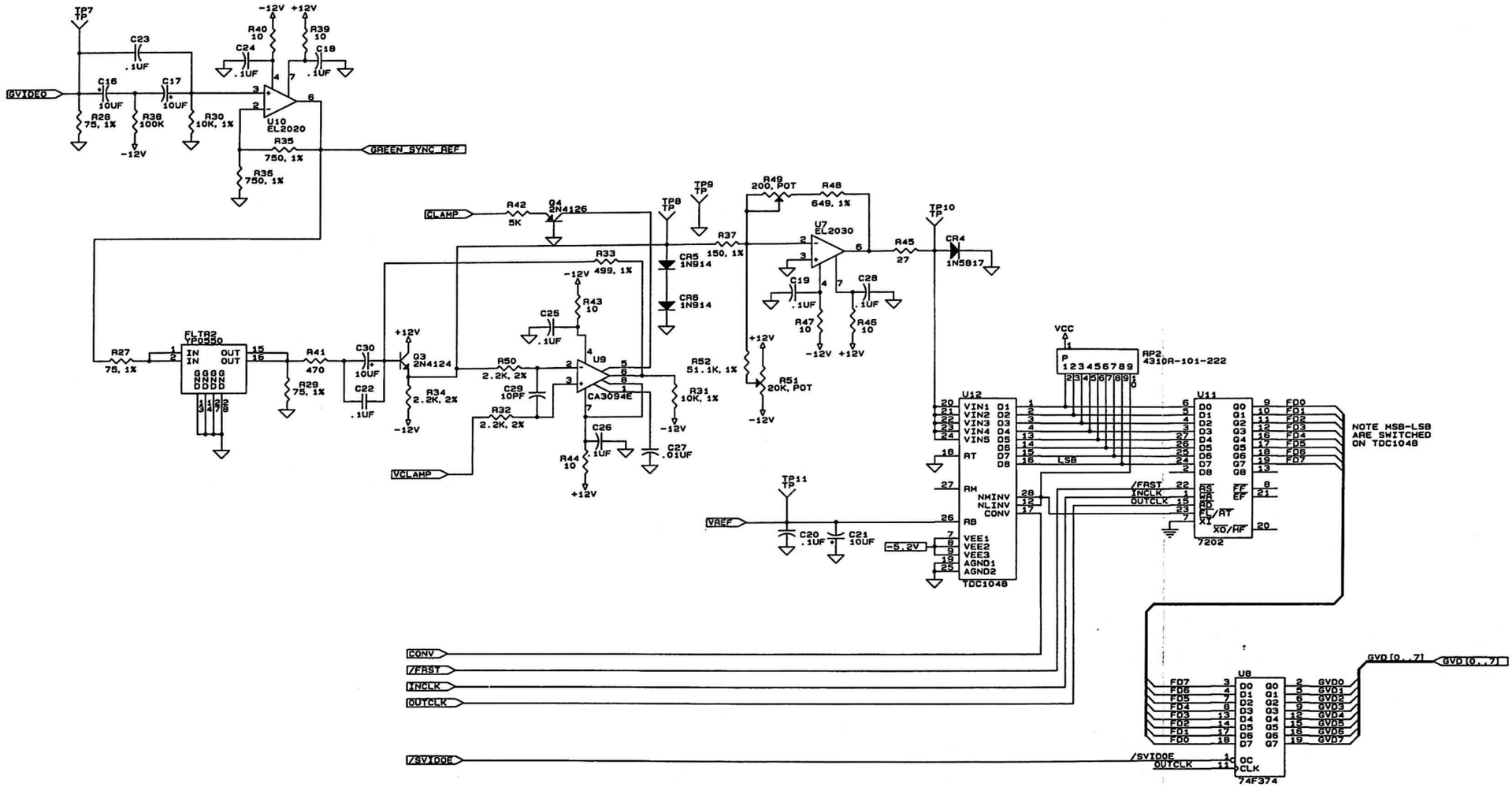

REV.	ENGRG CHANGE NO.	DWN	CHKD.	APP'D.	MO. DAY YR.
ORIGINAL ISSUE		MH			05-23-91

CHYRON CORPORATION
5 Hub Drive
Melville, New York 11747

TITLE
GREEN VIDEO A/D
CAMERA CAPTURE BOARD
VIDEO INPUT V...

DOCUMENT NUMBER
2A01542 REV A

SHEET 2 OF 7

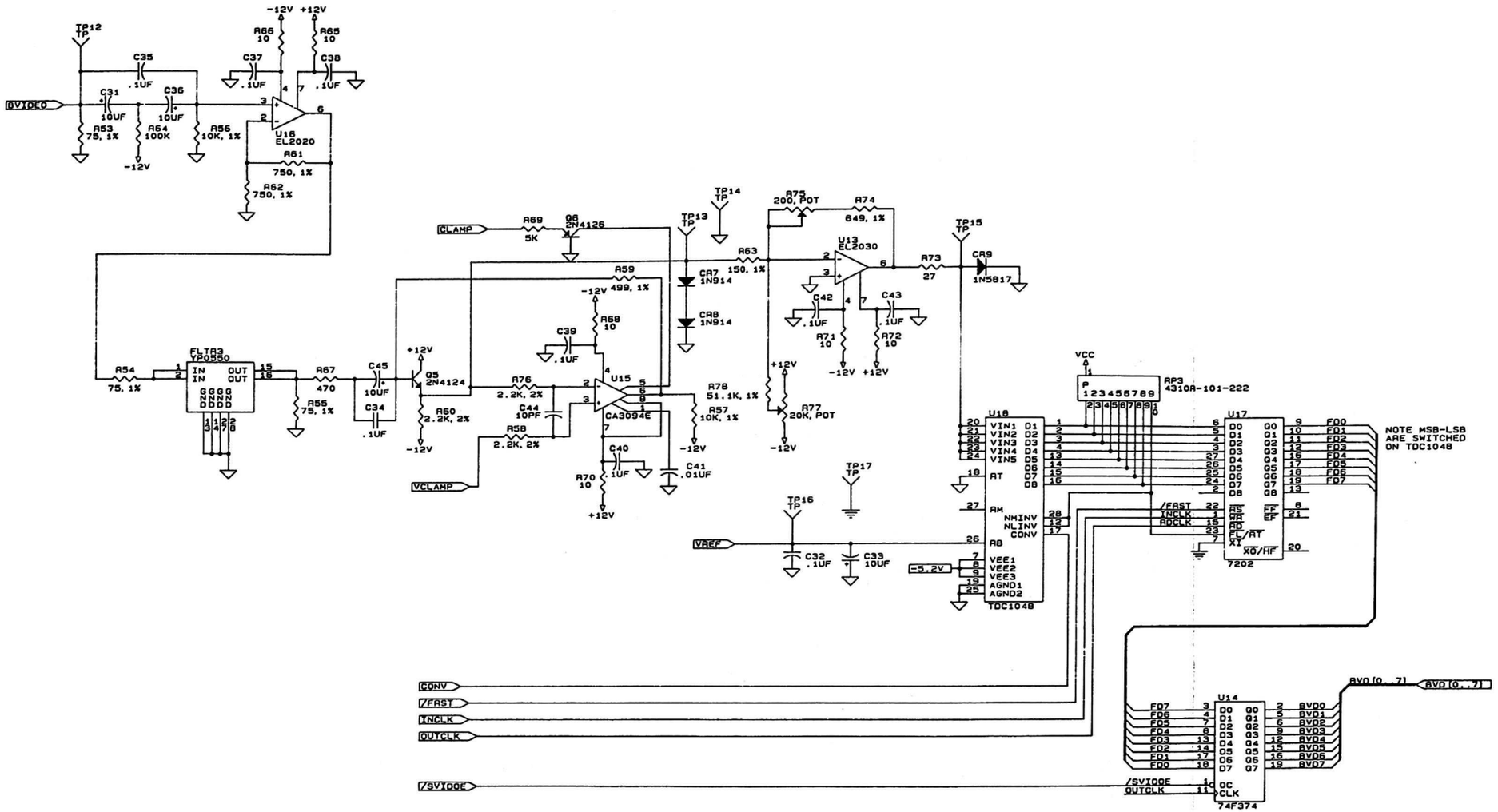

REV.	ENGRG CHANGE NO.	DWN	CHKD.	APP'D.	MO. DAY YR.
ORIGINAL ISSUE		MM			05-23-91

CHYRON CORPORATION
5 Hub Drive
Melville, New York 11747

TITLE
BLUE VIDEO A/D
CAMERA CAPTURE BOARD

DOCUMENT NUMBER
2A01542 REV A

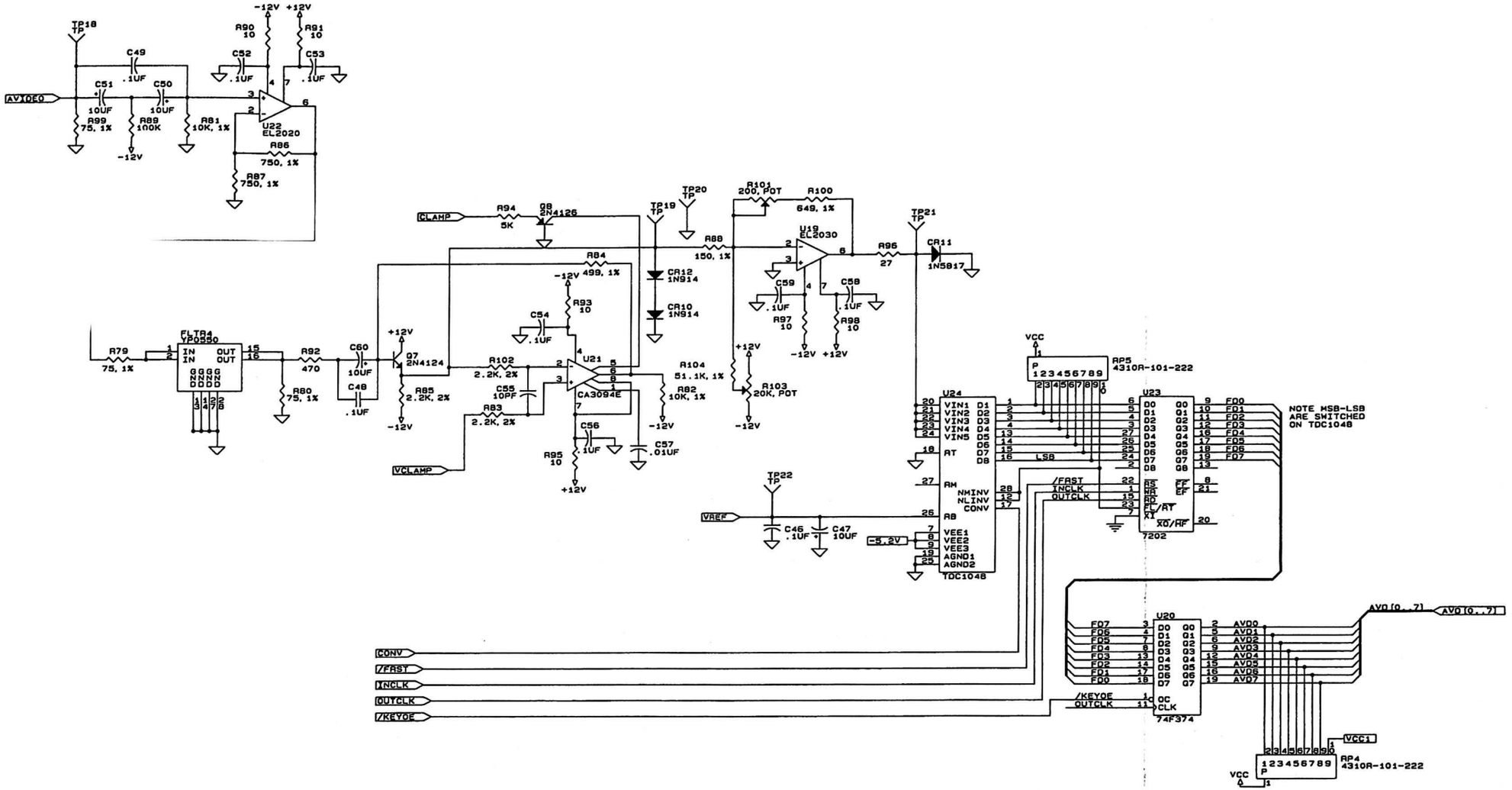

REV.	ENGRG CHANGE NO.	DWN	CHKD.	APP'D.	MO. DAY YR.
ORIGINAL ISSUE		MM			05-23-91

CHYRON CORPORATION
5 Hub Drive
Melville, New York 11747

TITLE
ALPHA VIDEO A/D
CAMERA CAPTURE BOARD

DOCUMENT NUMBER
2A01542 REV A

VIDEO-DC

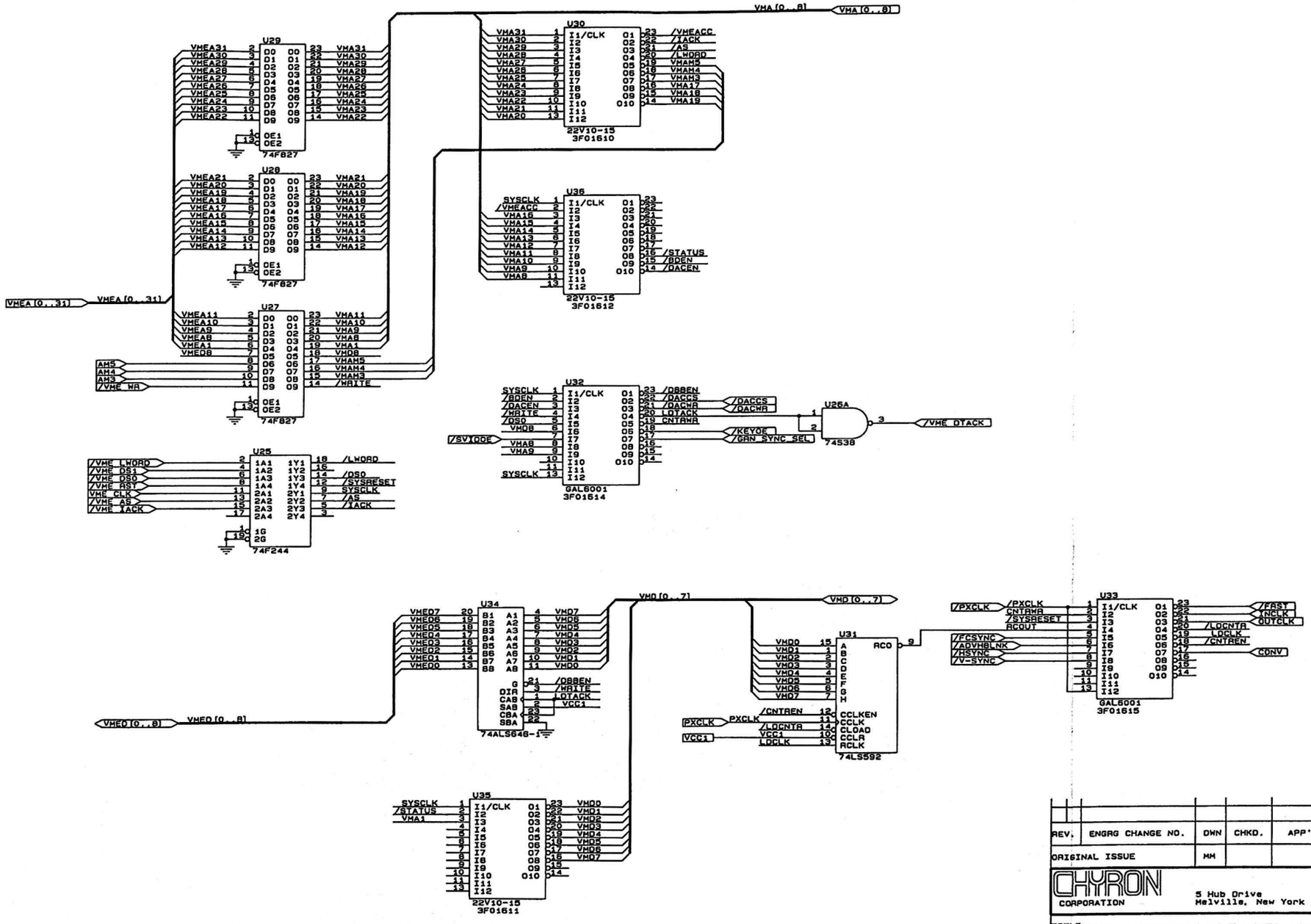

REV.	ENGRG CHANGE NO.	DWN	CHKD.	APP'D.	MO. DAY YR.
ORIGINAL ISSUE		MM			05-23-91

CHYRON CORPORATION
5 Hub Drive
Melville, New York 11747

TITLE: VME INTERFACE+DELAY COUNTER CAMERA CAPTURE BOARD

DOCUMENT NUMBER: 2A01542 REV A

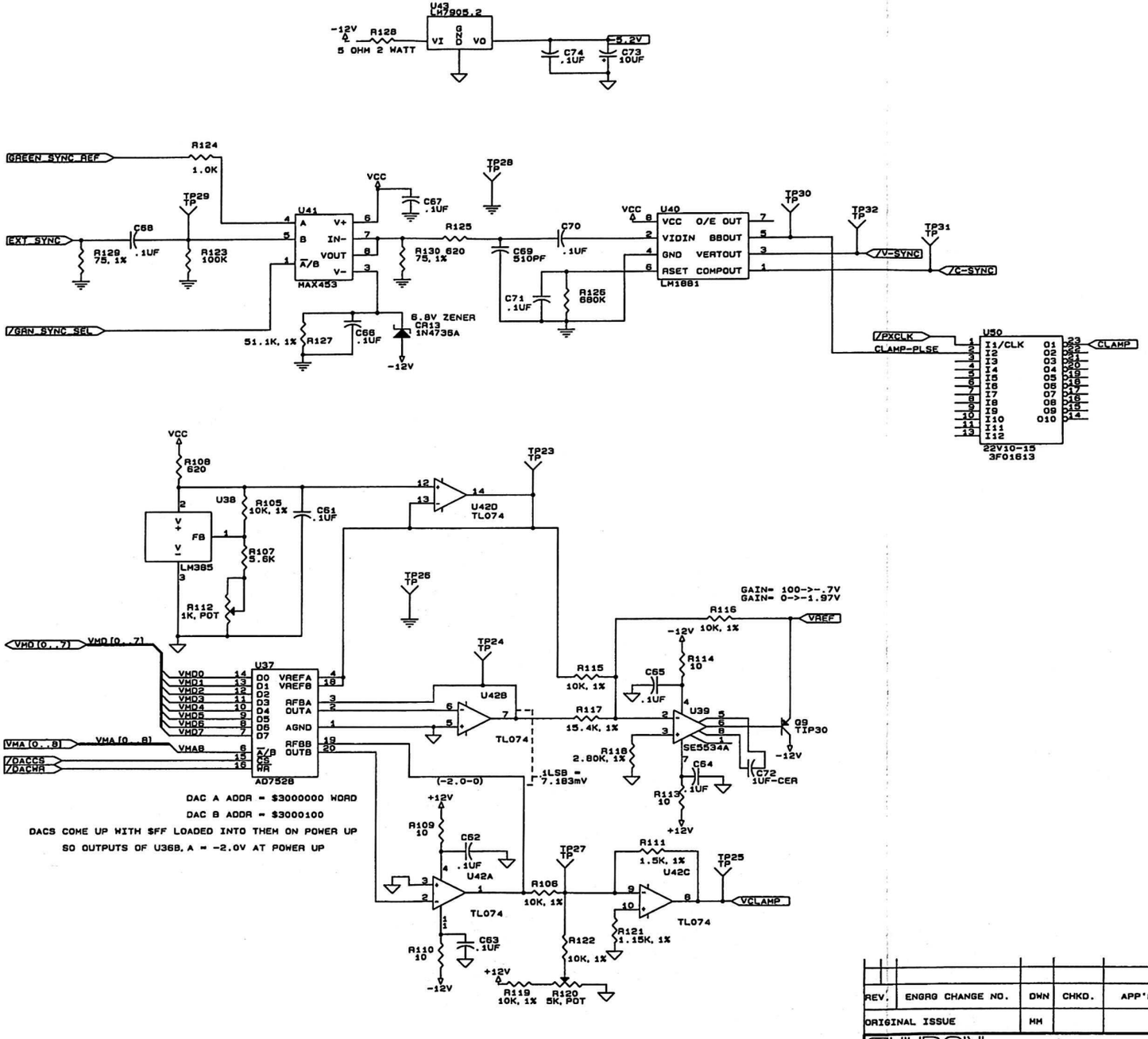

REV.	ENGRG CHANGE NO.	DWN	CHKD.	APP'D.	MO. DAY YR.
ORIGINAL ISSUE		MM			05-23-91

CHYRON CORPORATION
5 Hub Drive
Melville, New York 11747

TITLE: VOLTAGE REF AND SYNC STRIP
CAMERA CAPTURE BOARD

DOCUMENT NUMBER: 2A01542 REV A

SCALE: NONE
SHEET 6 OF 7

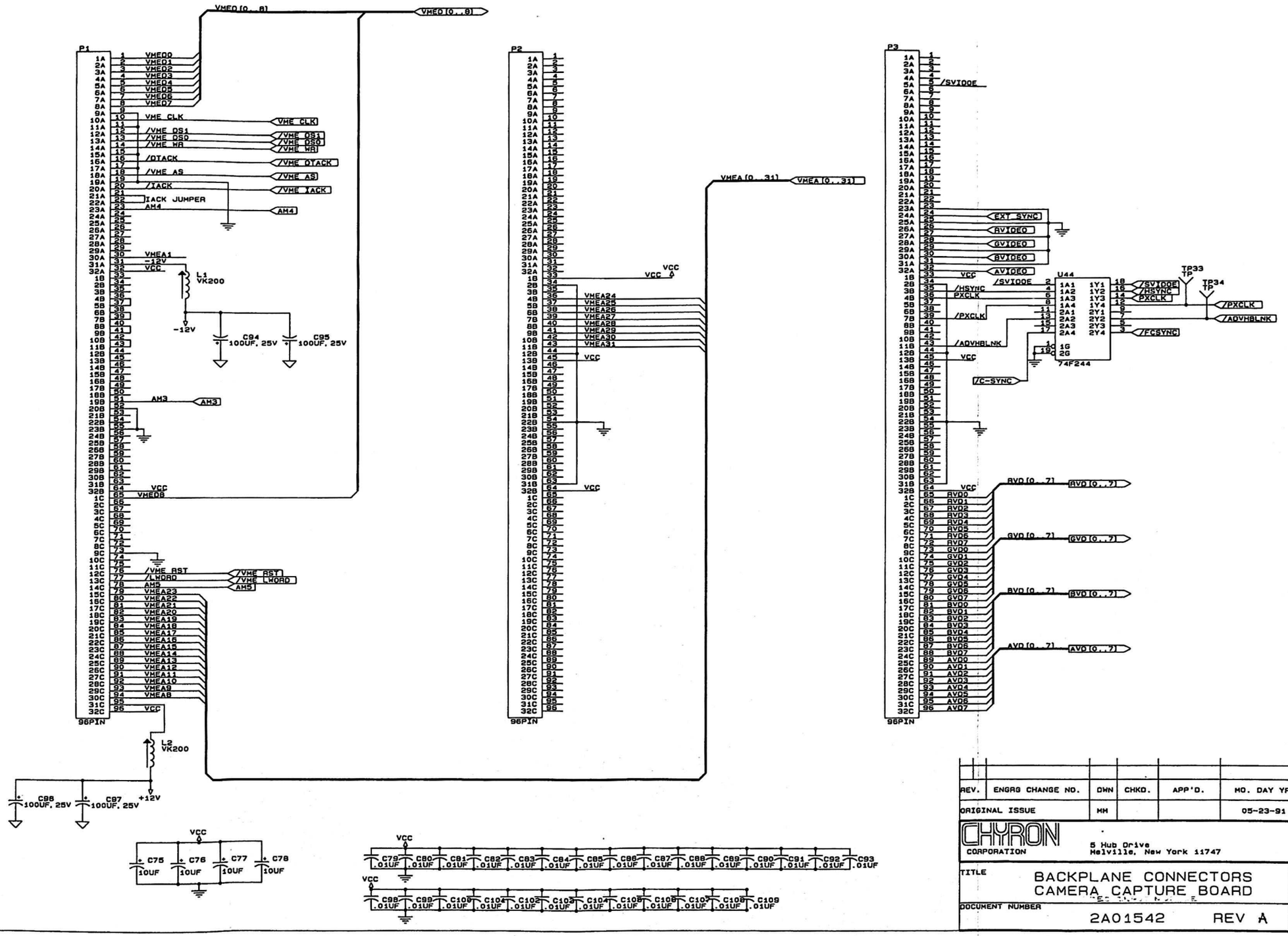

REV.	ENGRG CHANGE NO.	DWN	CHKD.	APP'D.	MO. DAY YR.
ORIGINAL ISSUE		MH			05-23-91

CHYRON CORPORATION
5 Hub Drive
Melville, New York 11747

TITLE
BACKPLANE CONNECTORS
CAMERA CAPTURE BOARD

DOCUMENT NUMBER
2A01542 REV A

P1

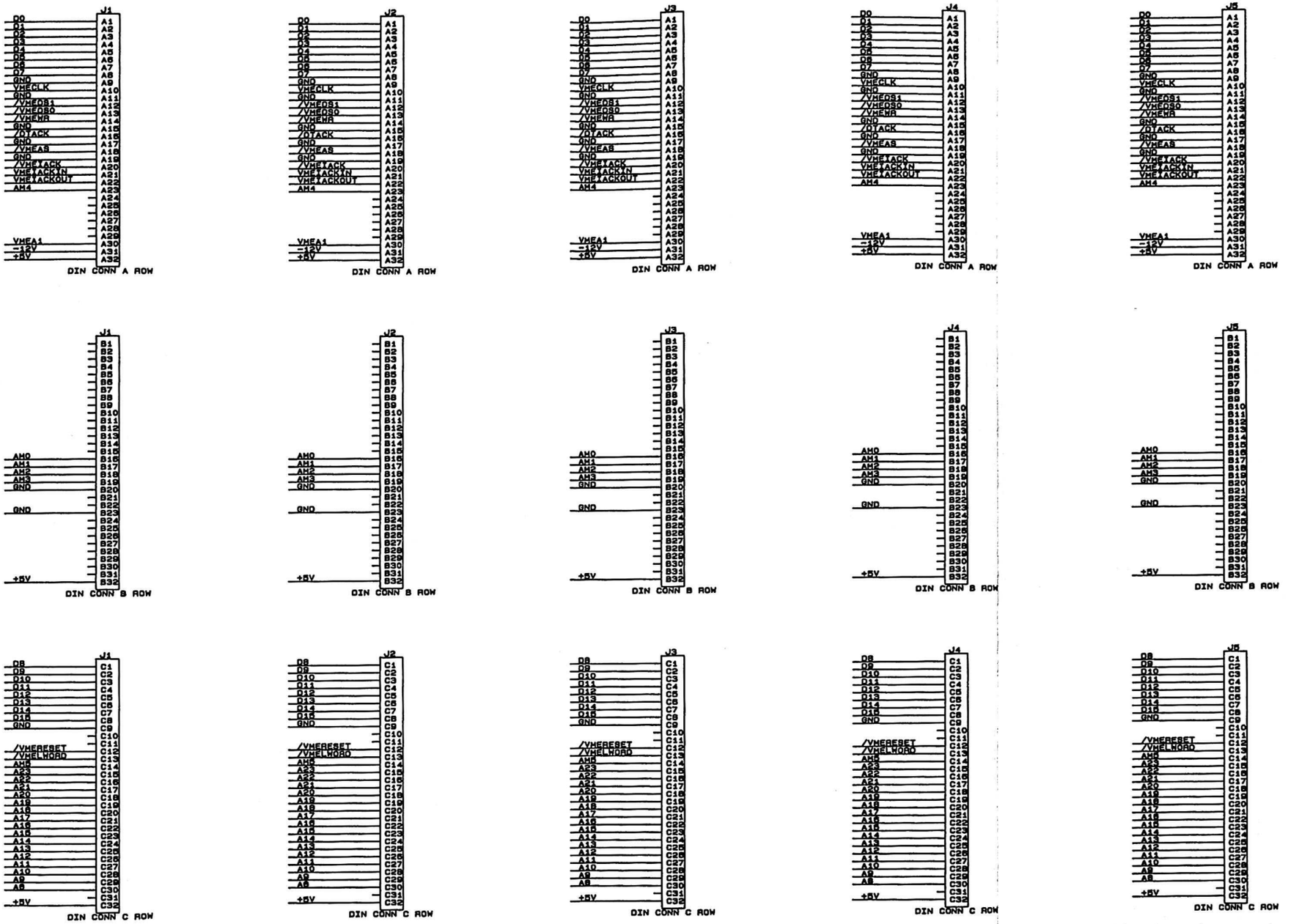

REV.	ENGR8 CHANGE NO.	DWN	CHKD.	APP'D.	MO. DAY YR.
ORIGINAL ISSUE		VS			8-6-92

CHYRON CORPORATION
5 Hub Drive
Melville, New York 11747

TITLE: BACKPLANE LOGICS FOR INFINIT!

DOCUMENT NUMBER: 2A01625 REV 0

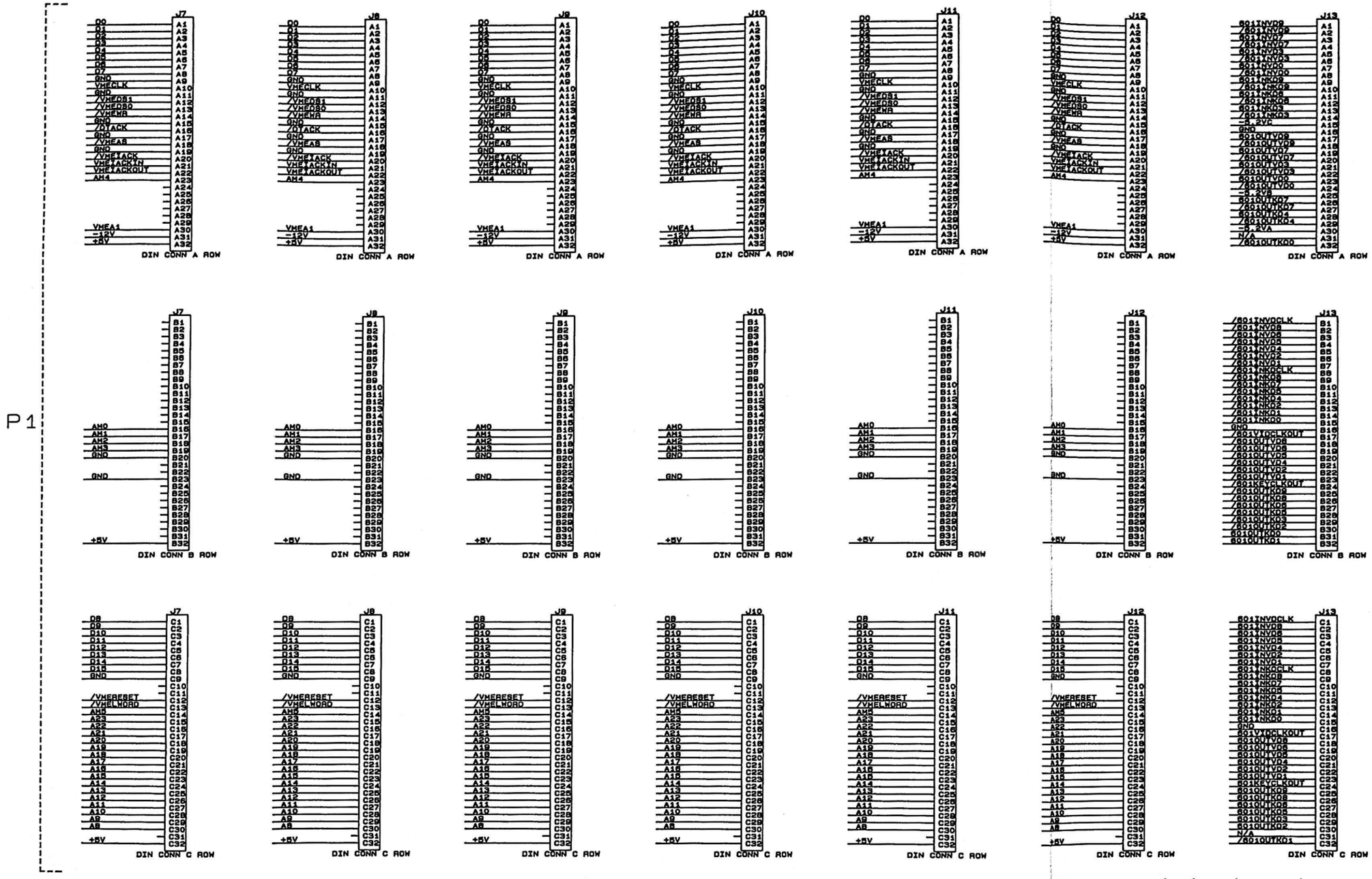

REV.	ENGRG CHANGE NO.	DWN	CHKD.	APP'D.	MO. DAY YR.
ORIGINAL ISSUE		VS			5-5-92

CHYRON CORPORATION
5 Hub Drive
Melville, New York 11747

TITLE: BACKPLANE LOGICS FOR INFINIT!

DOCUMENT NUMBER: 2A01625 REV 0

SHEET 2 OF 6

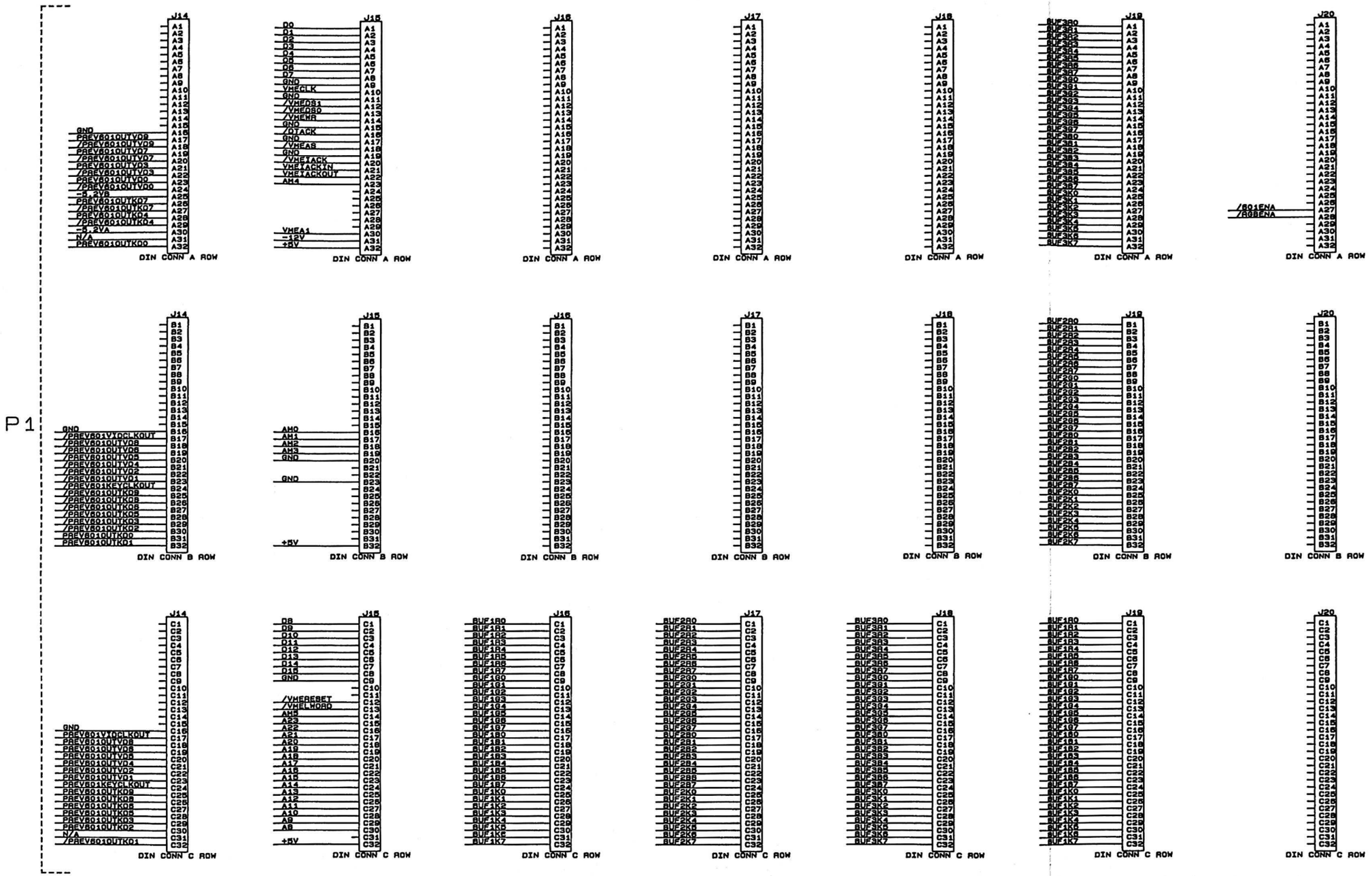

REV.	ENGRG CHANGE NO.	DWN	CHKD.	APP'D.	MO. DAY YR.
ORIGINAL ISSUE		VS			8-5-92

CHYRON CORPORATION
5 Hub Drive
Melville, New York 11747

TITLE: BACKPLANE LOGICS FOR INFINIT!

DOCUMENT NUMBER: 2A01625 REV 0

SHEET OF: 3 OF 8

P2

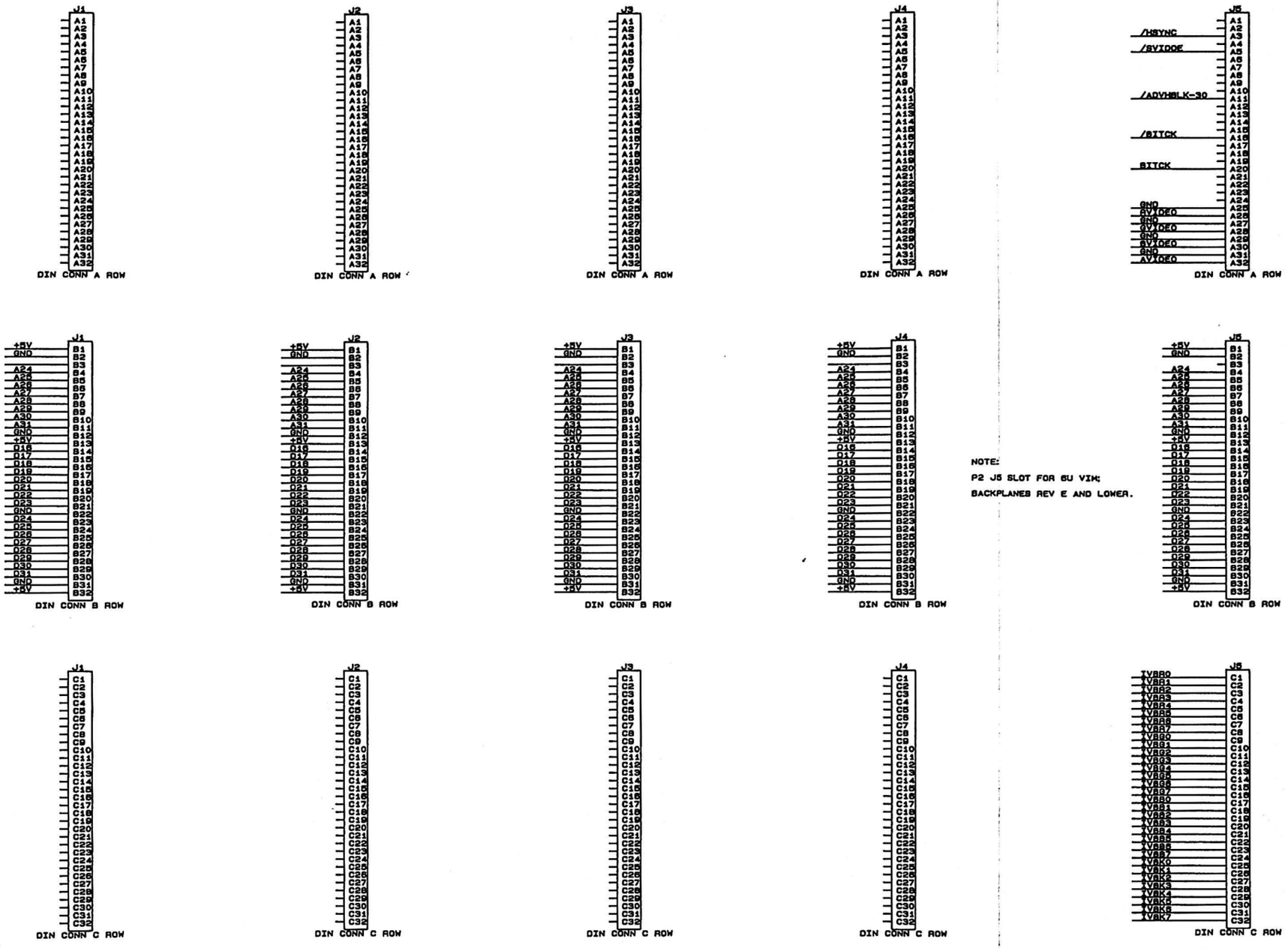

NOTE:

P2 J5 SLOT FOR 6U VIM;
BACKPLANES REV E AND LOWER.

REV.	ENGRG CHANGE NO.	DWN	CHKD.	APP'D.	MO. DAY YR.
ORIGINAL ISSUE		VS			8-5-92

CHYRON CORPORATION
5 Hub Drive
Melville, New York 11747

TITLE: BACKPLANE LOGICS FOR INFINIT!

DOCUMENT NUMBER: 2A01625 REV 0

SHEET 4 OF 6

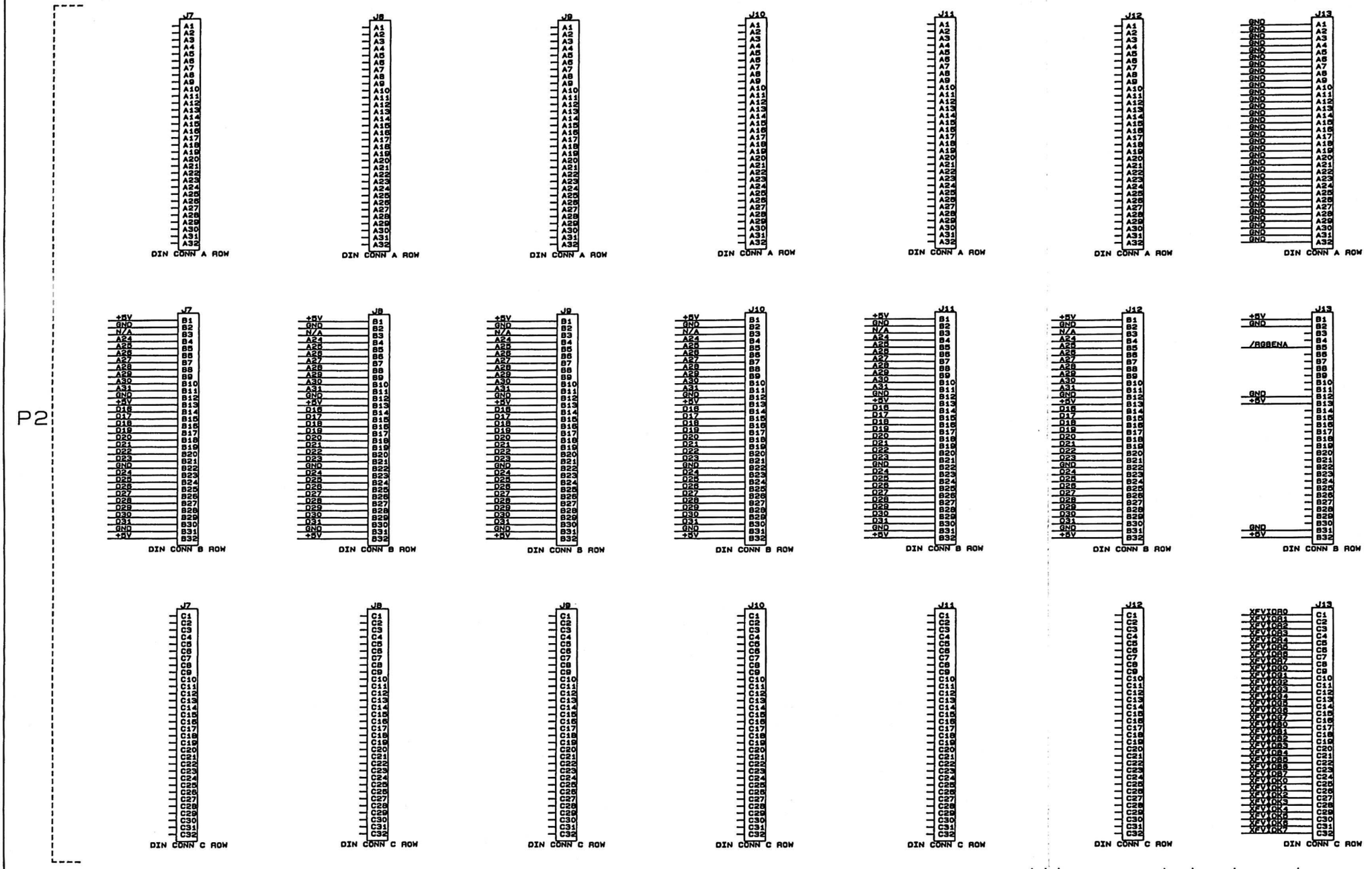

REV.	ENGRG CHANGE NO.	DWN	CHKD.	APP'D.	MO. DAY YR.
ORIGINAL ISSUE		VS			8-5-92

CHYRON CORPORATION
5 Hub Drive
Melville, New York 11747

TITLE
BACKPLANE LOGICS
FOR INFINIT!

DOCUMENT NUMBER
2A01625 REV 0

SIZE B

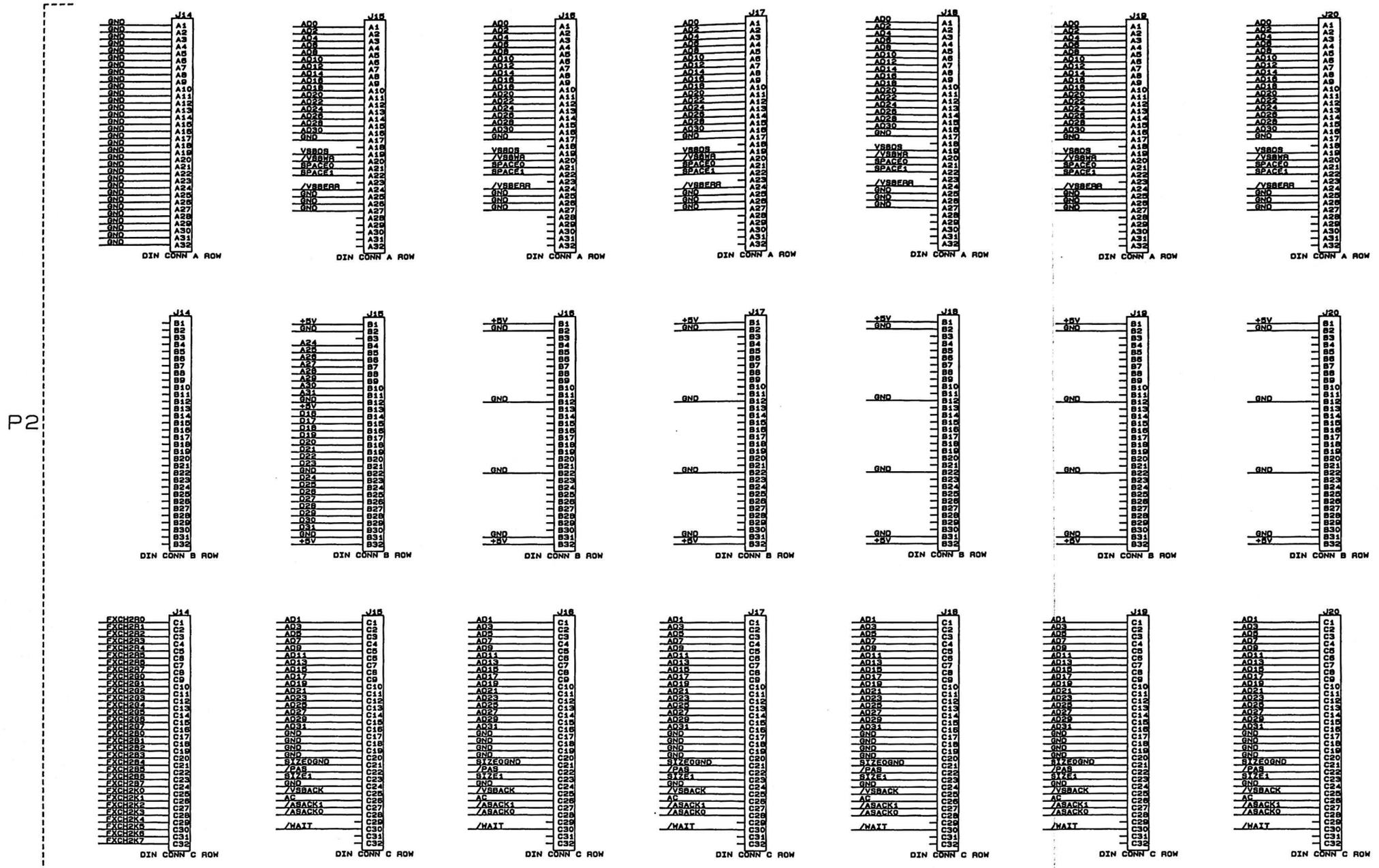

REV.	ENGRG CHANGE NO.	DWN	CHKD.	APP'D.	MO. DAY YR.
ORIGINAL ISSUE		VS			8-5-92

CHYRON CORPORATION
5 Hub Drive
Melville, New York 11747

TITLE
BACKPLANE LOGICS
FOR INFINIT!

DOCUMENT NUMBER
2A01625 REV 0

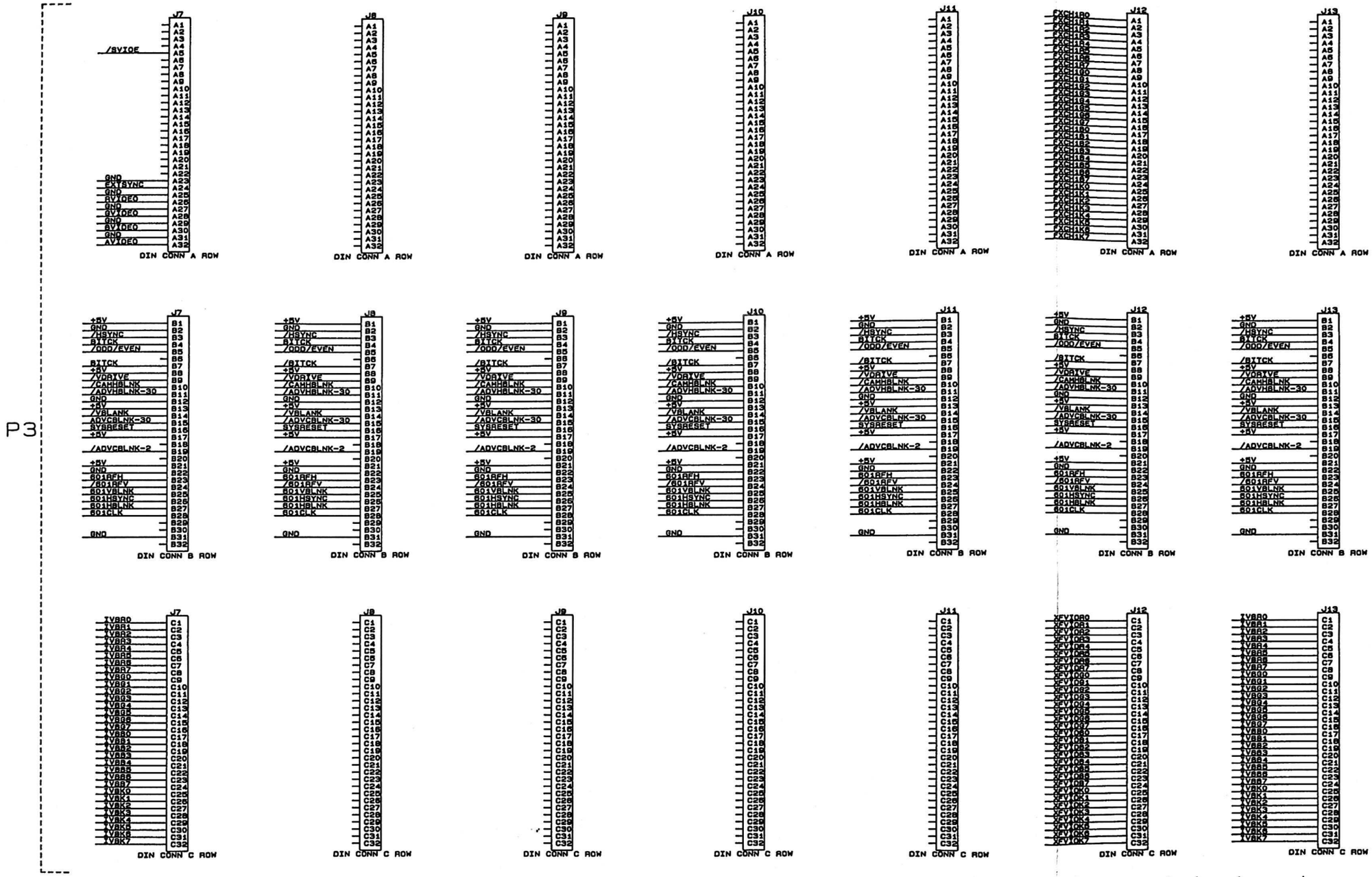

REV.	ENGR CHANGE NO.	DWN	CHKD.	APP'D.	MO. DAY YR.
ORIGINAL ISSUE		VS			8-5-92

CHYRON CORPORATION
5 Hub Drive
Melville, New York 11747

TITLE: BACKPLANE LOGICS FOR INFINIT!

DOCUMENT NUMBER: 2A01625 REV 0

SHEET 7 OF 8

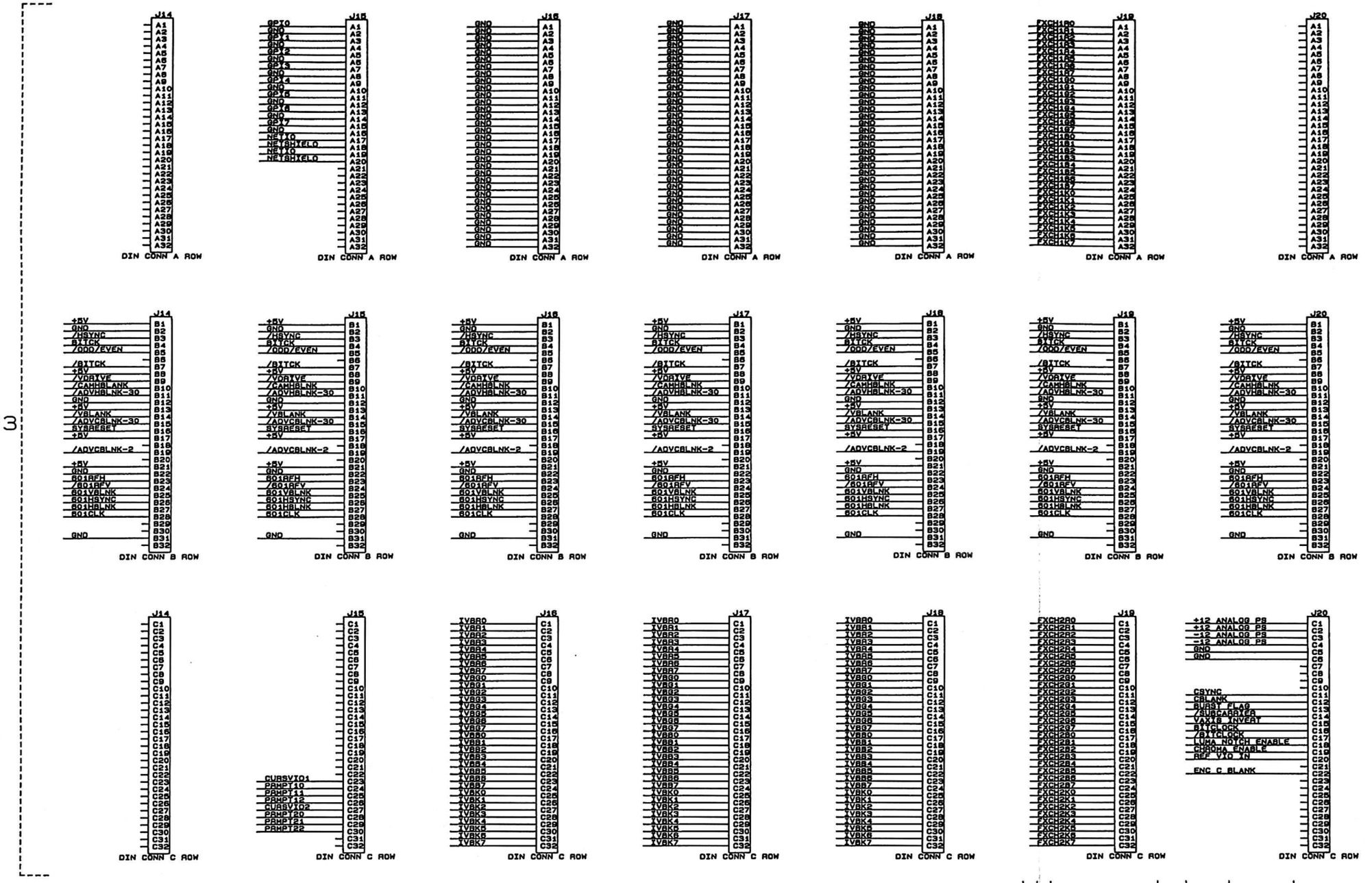

REV.	ENGRG CHANGE NO.	DWN	CHKD.	APP'D.	MO. DAY YR.
ORIGINAL ISSUE		VS			8-5-92

CHYRON CORPORATION
5 Hub Drive
Melville, New York 11747

TITLE
BACKPLANE LOGICS
FOR INFINIT!

DOCUMENT NUMBER
2A01625 REV 0

SHEET 6 OF 6

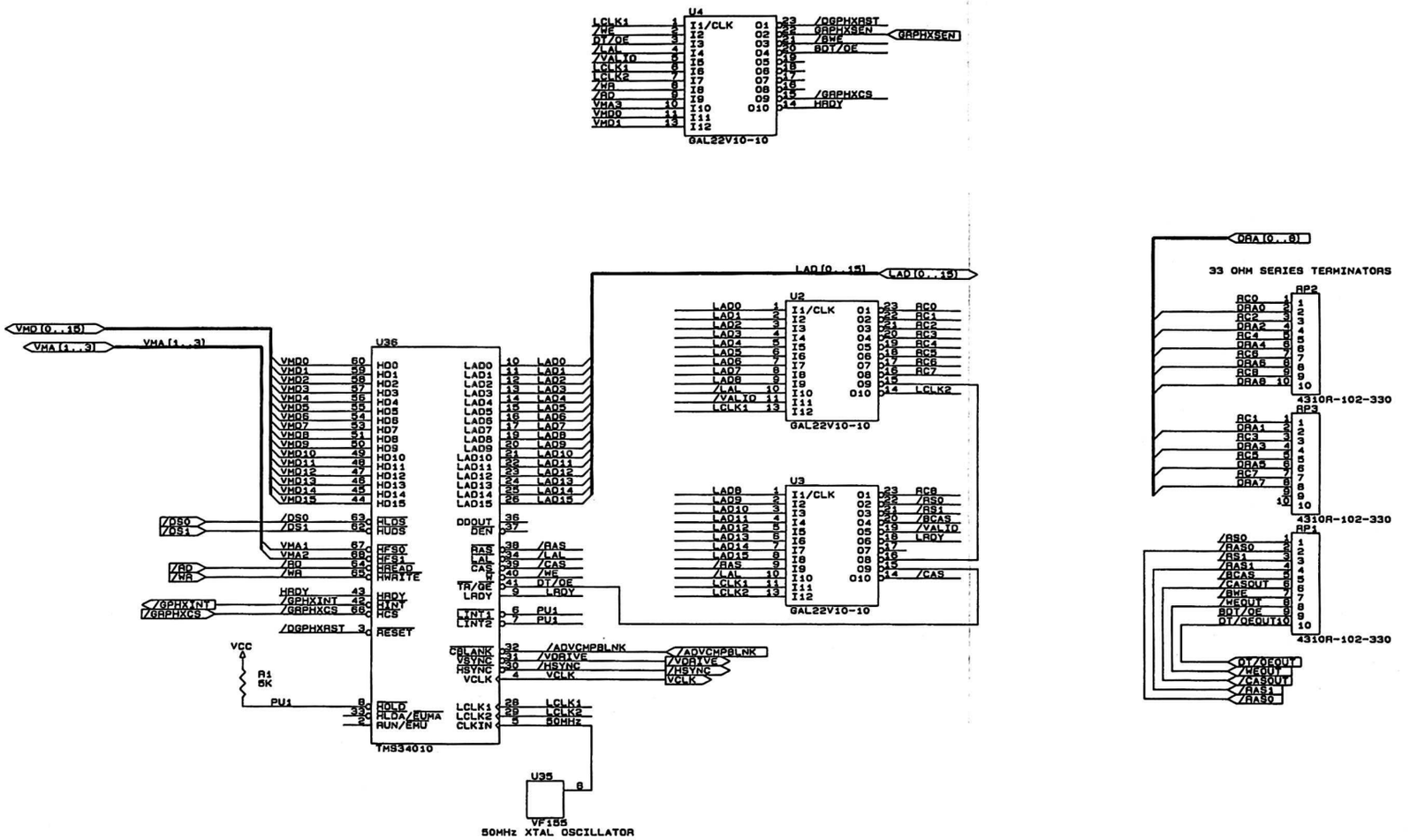

REV.	ENGRG CHANGE NO.	DWN	CHKD.	APP'D.	MO. DAY YR.
ORIGINAL ISSUE		YAPPY			06-01-92

CHYRON CORPORATION
5 Hub Drive
Melville, New York 11747

TITLE: INFINIT! TRANSCODER BOARD
PROMPT CHANNEL LOGIC

DOCUMENT NUMBER: 2A01760

SHEET 7 OF 10

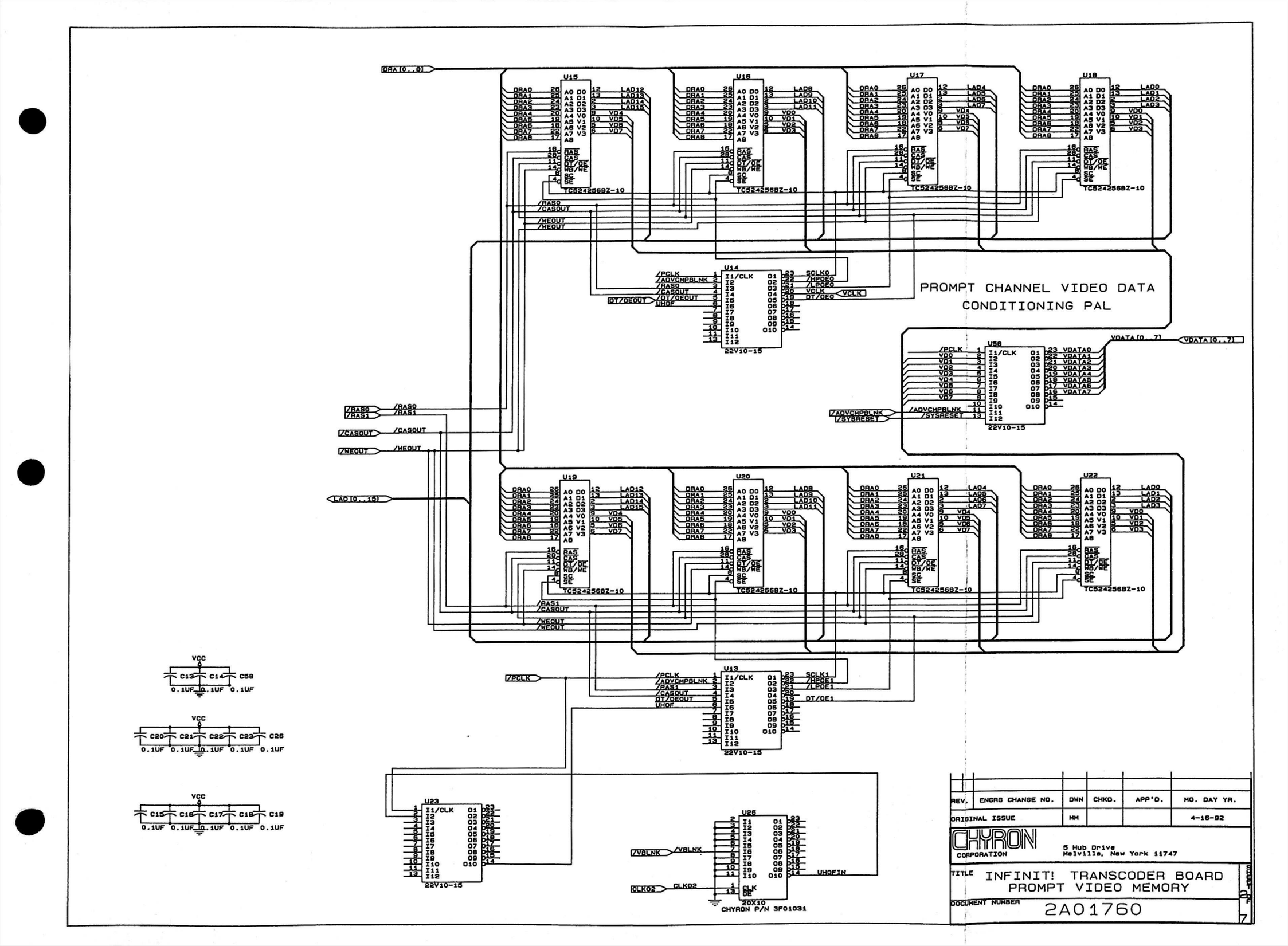

REV.	ENGRG CHANGE NO.	DWN	CHKD.	APP'D.	MO. DAY YR.
ORIGINAL ISSUE		MM			4-16-92

CHYRON CORPORATION
5 Hub Drive
Melville, New York 11747

TITLE: INFINIT! TRANSCODER BOARD
PROMPT VIDEO MEMORY

DOCUMENT NUMBER: 2A01760

SIZE: D

7

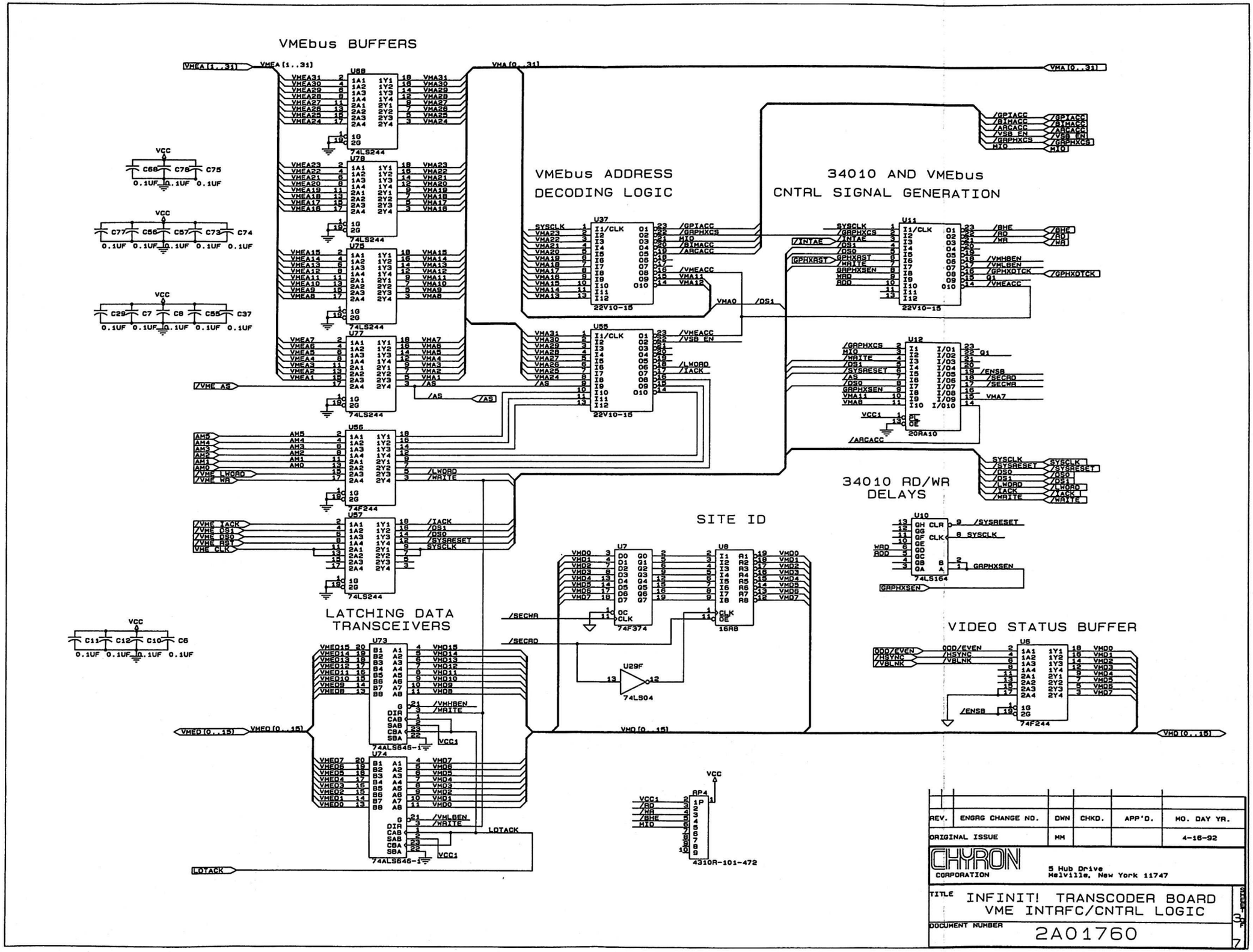
VMEbus BUFFERS
VMEbus ADDRESS DECODING LOGIC
34010 AND VMEbus CNTRL SIGNAL GENERATION
34010 RD/WR DELAYS
SITE ID
LATCHING DATA TRANSCEIVERS
VIDEO STATUS BUFFER
74LS244
74F244
74LS646-1
74F374
16R8
74LS04
74LS164
22V10-15
20RA10
4310R-101-472
VMEA [1..31]
VMA [0..31]
VMED [0..15]
VMD [0..15]
VCC
0.1UF
REV.
ENGRG CHANGE NO.
DWN
CHKD.
APP'D.
MO. DAY YR.
ORIGINAL ISSUE
MM
4-16-92
CHYRON CORPORATION
5 Hub Drive
Melville, New York 11747
TITLE
INFINIT! TRANSCODER BOARD
VME INTRFC/CNTRL LOGIC
DOCUMENT NUMBER
2A01760
SHEET 3 OF 7

VME TO VSB ADDRESS/DATA CONVERTER

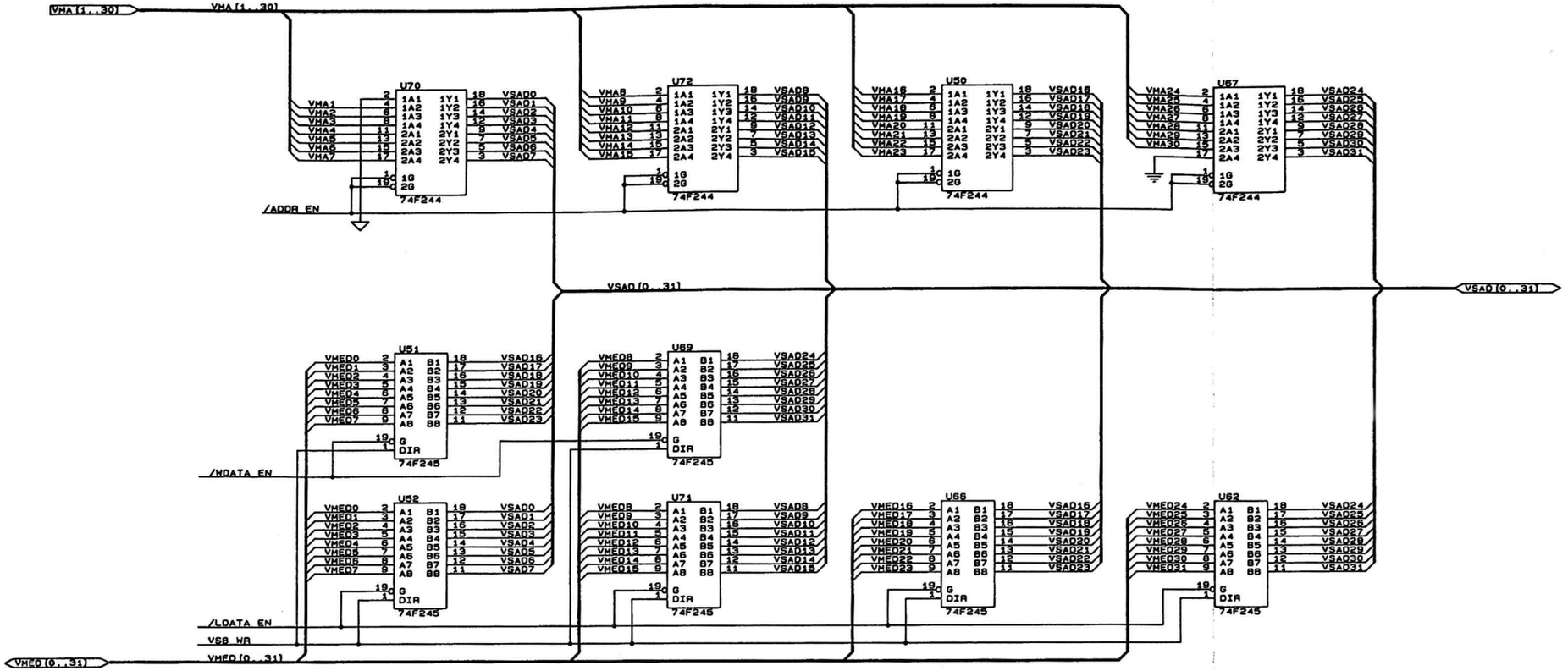

VME TO VSB CNTRL SIGNAL CONVERSION

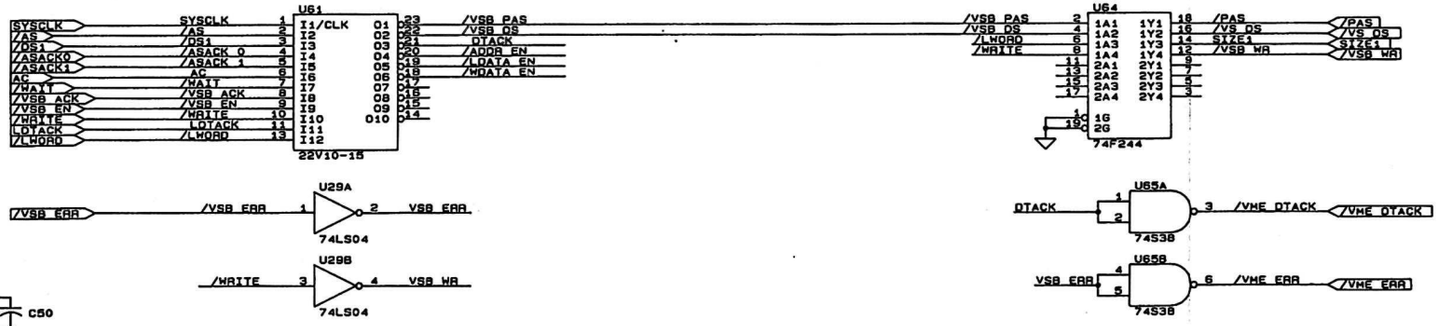

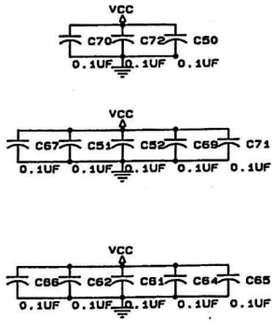

VSBbus TERMINATORS

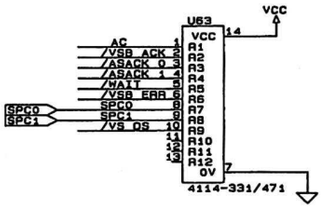

REV.	ENGRG CHANGE NO.	DWN	CHKD.	APP'D.	MO. DAY YR.
A		DJR			3-25-93
ORIGINAL ISSUE		DJR			4-16-92

CHYRON CORPORATION
5 Hub Drive
Melville, New York 11747

TITLE
INFINIT! TRANSCODER BOARD
VME-VSB TRANSCODER LOGIC

DOCUMENT NUMBER
2A01760

SHEET 4 OF 7

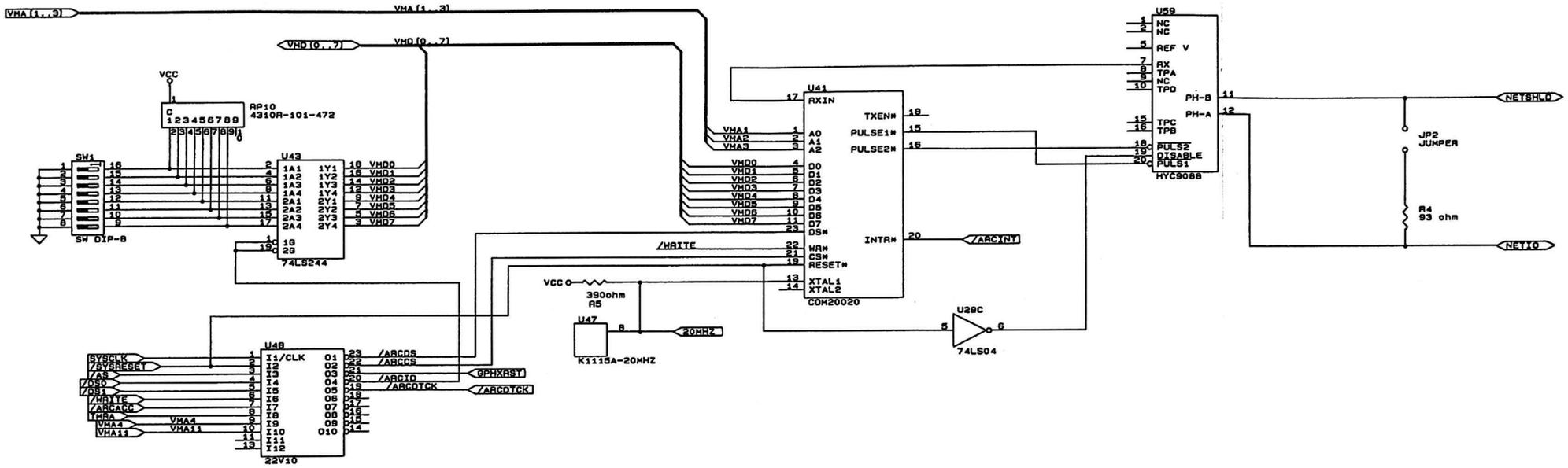

REV.	ENGRG CHANGE NO.	DWN	CHKD.	APP'D.	MO. DAY YR.
A		DJR			3-15-93
ORIGINAL ISSUE		DJR			6-09-92

CHYRON CORPORATION
5 Hub Drive
Melville, New York 11747

TITLE: INFINIT! TRANSCODER BOARD
ARNET CONTROLLER

DOCUMENT NUMBER: 2A01760

SH. 5 OF 7

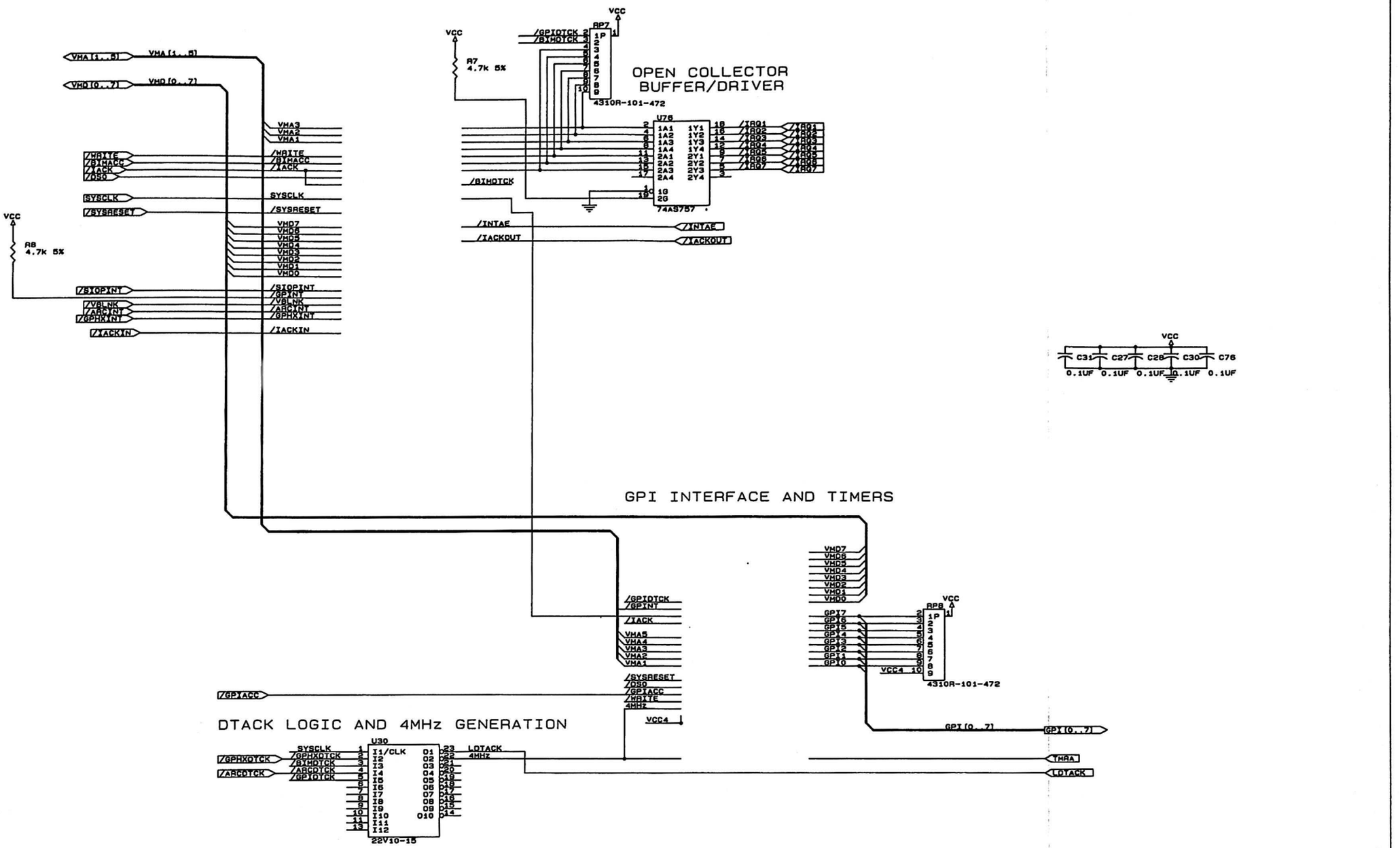

REV.	ENGRG CHANGE NO.	DWN	CHKD.	APP'D.	MO. DAY YR.
A		DJR			3-15-93
ORIGINAL ISSUE		MM			4-16-92

CHYRON CORPORATION
5 Hub Drive
Melville, New York 11747

TITLE: INFINIT! TRANSCODER BOARD
VMEbus INTERRUPTER MODULE

DOCUMENT NUMBER: 2A01760

SHEET 7 OF 8

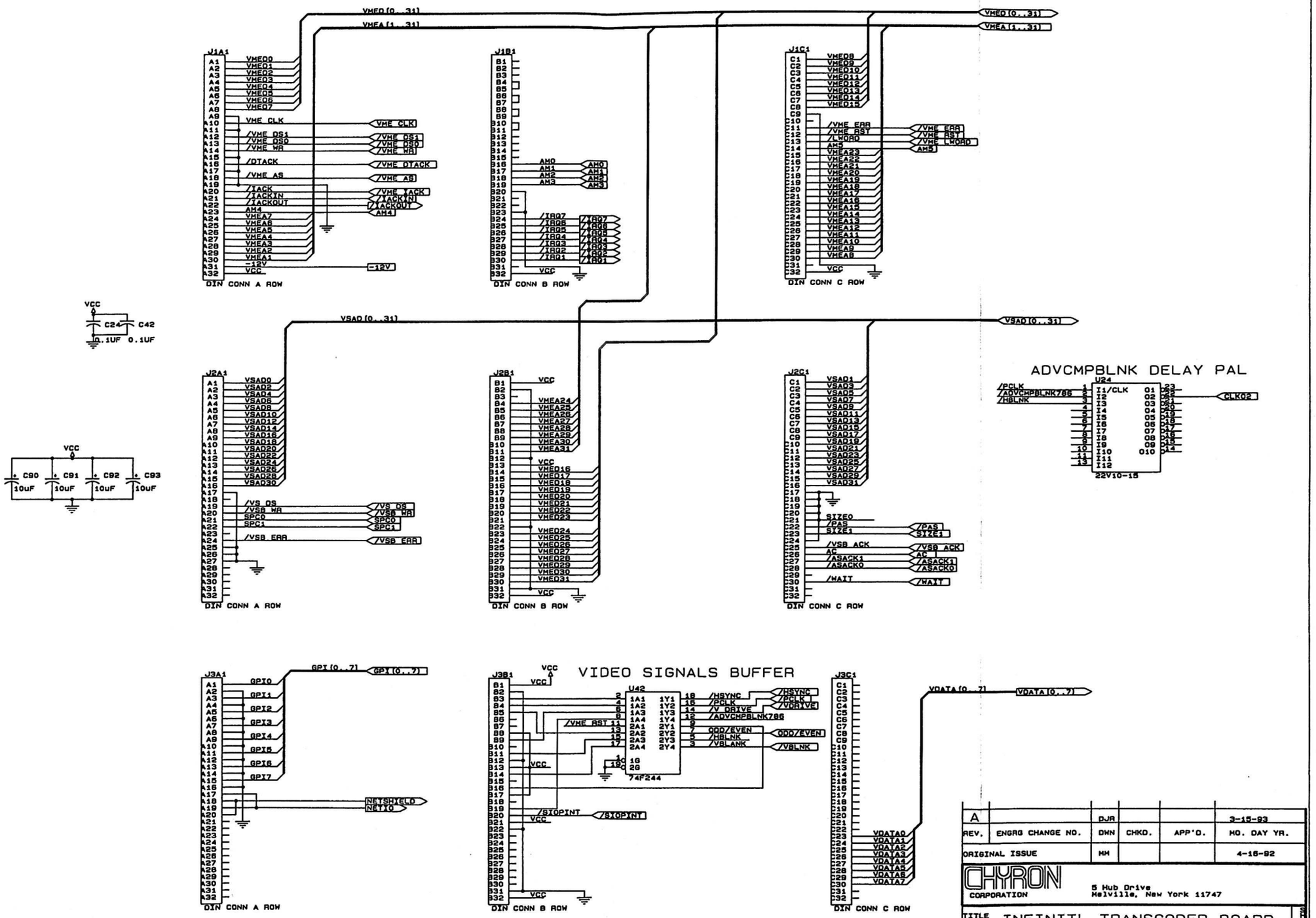

REV.	ENGRG CHANGE NO.	DWN	CHKD.	APP'D.	NO. DAY YR.
A		DJR			3-15-93
ORIGINAL ISSUE		MM			4-16-92

CHYRON CORPORATION
5 Hub Drive
Melville, New York 11747

TITLE: INFINIT! TRANSCODER BOARD BACKPLANE CONNECTORS

DOCUMENT NUMBER: 2A01760

SHEET 7 OF 7

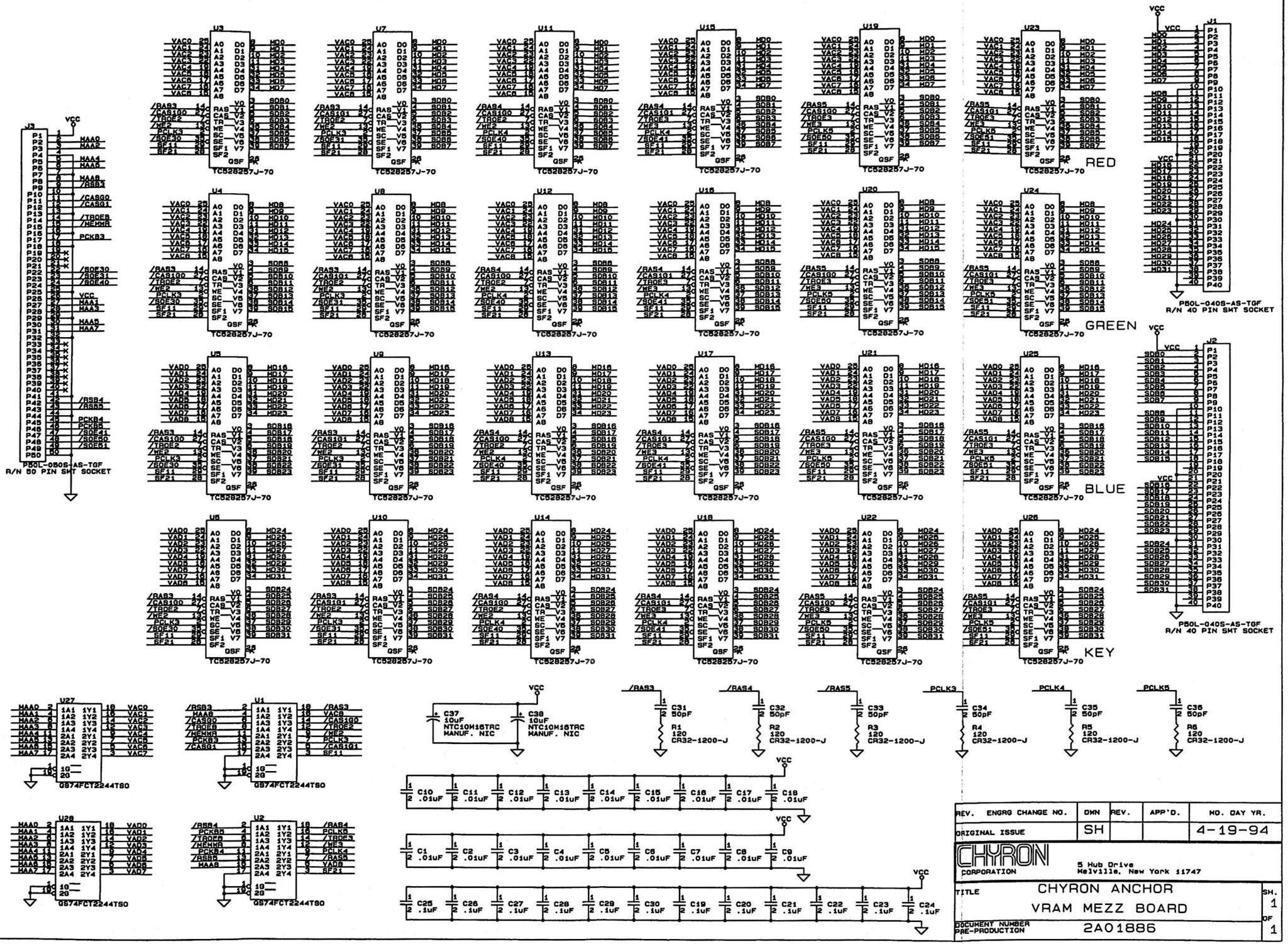

REV.	ENGRG CHANGE NO.	DWN	REV.	APP'D.	MO. DAY YR.
ORIGINAL ISSUE		SH			4-19-94

CHYRON CORPORATION
5 Hub Drive
Melville, New York 11747

TITLE: CHYRON ANCHOR VRAM MEZZ BOARD

SH. 1 OF 1

DOCUMENT NUMBER PRE-PRODUCTION: 2A01886

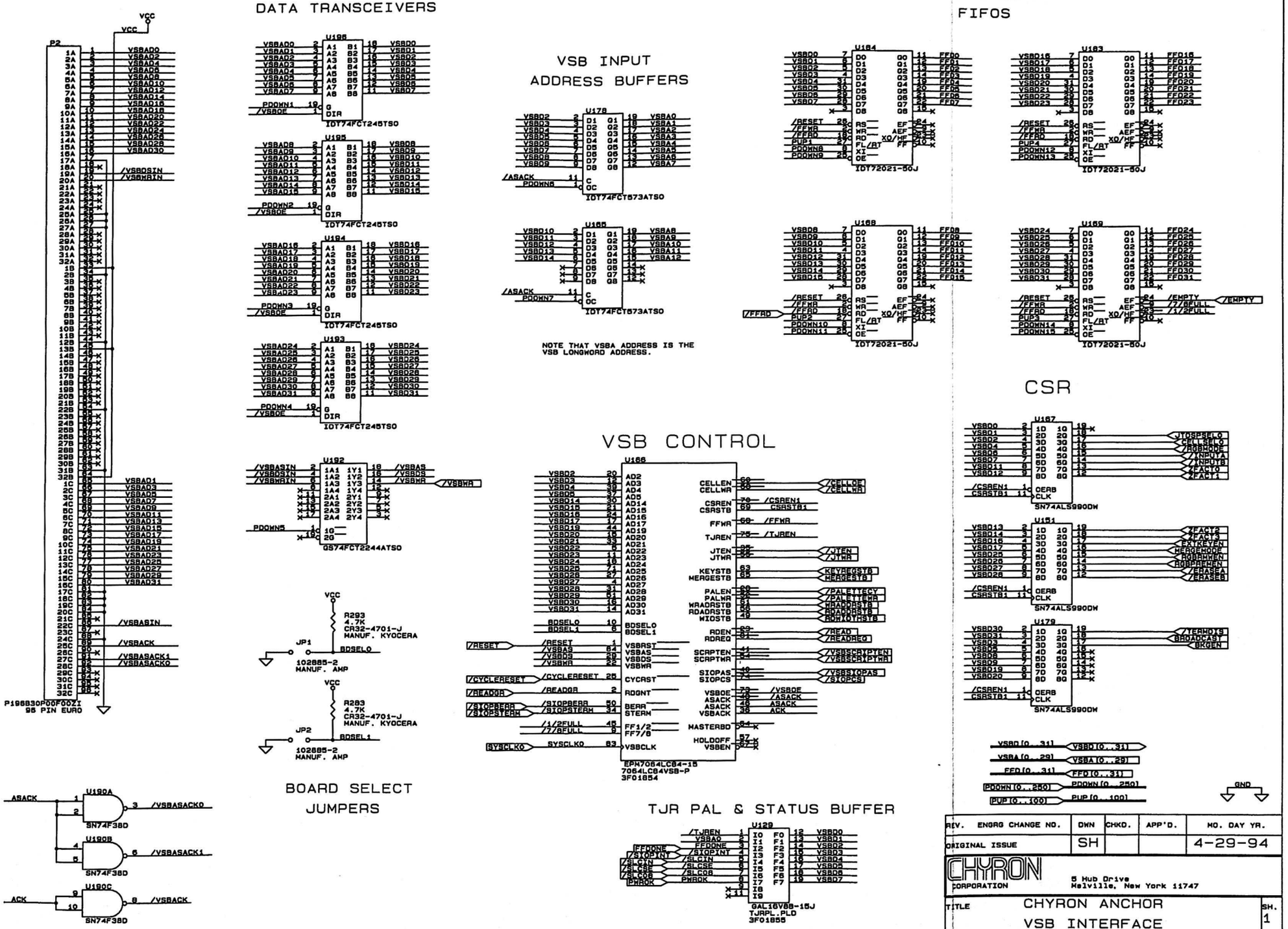

REV.	ENGRG CHANGE NO.	DWN	CHKD.	APP'D.	NO. DAY YR.
ORIGINAL ISSUE		SH			4-29-94

CHYRON CORPORATION
5 Hub Drive
Melville, New York 11747

TITLE		SH.
	CHYRON ANCHOR VSB INTERFACE	1 OF 16
DOCUMENT NUMBER PRE-PRODUCTION	2A01874	

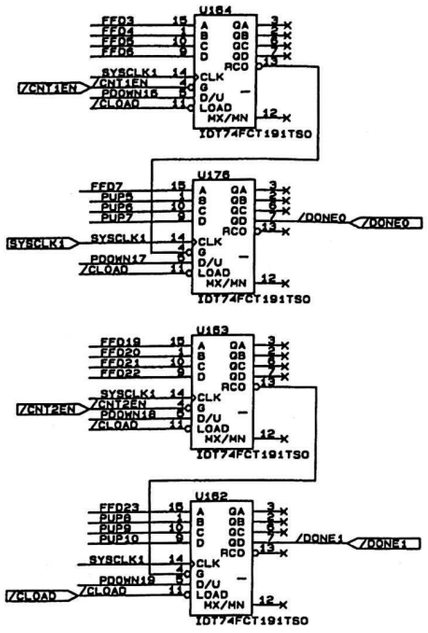

TAG COUNTERS

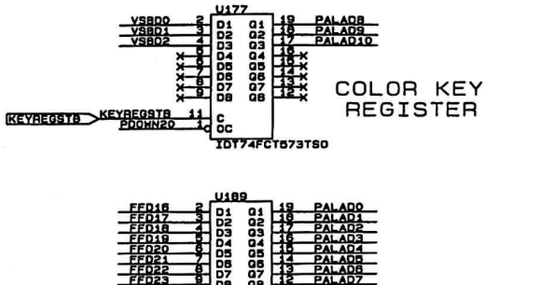

COLOR KEY REGISTER

INDEX REGISTER

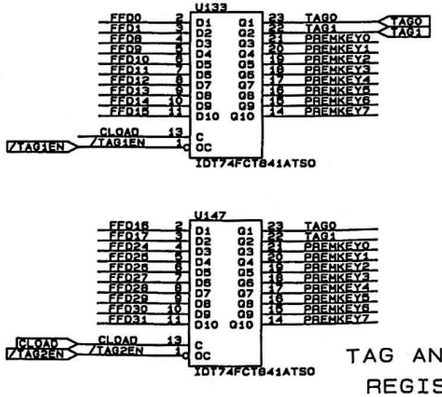

TAG AND KEY REGISTERS

RGB INPUT REGISTERS

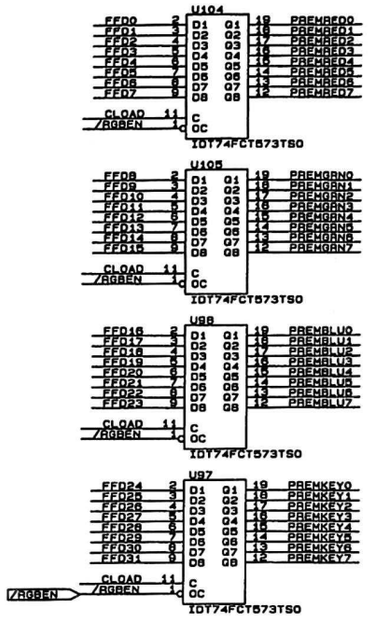

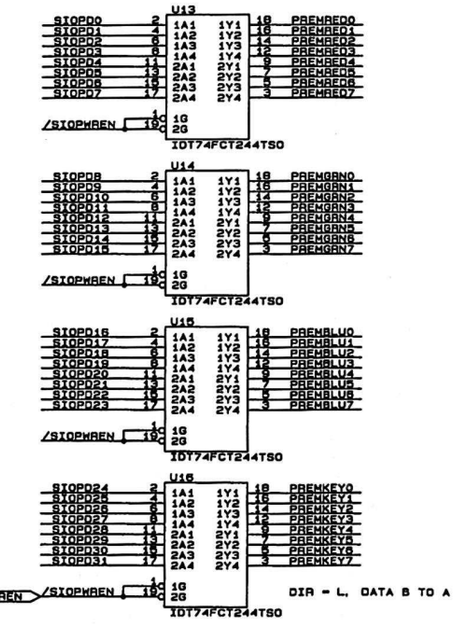

SIOP LOCAL WRITE DATA BUFFERS

PALETTE ADDRESS BUFFERS

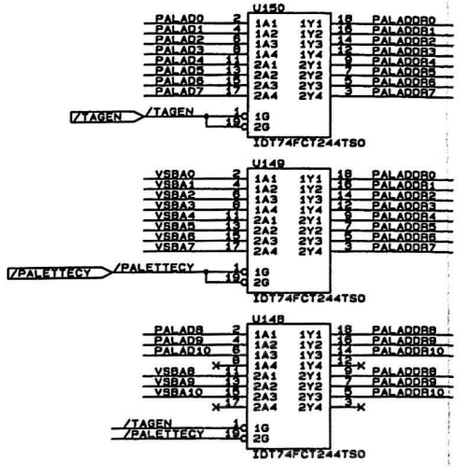

PALETTE DATA TRANSCEIVERS

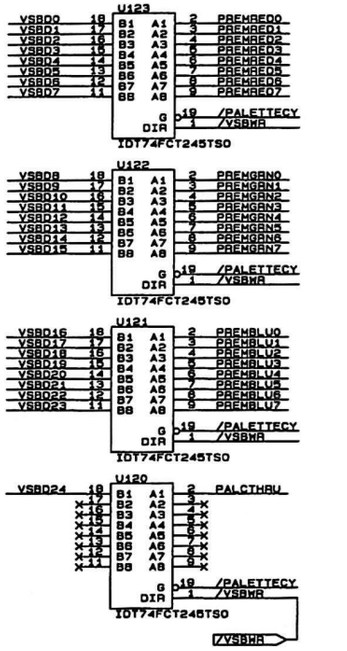

PALETTES

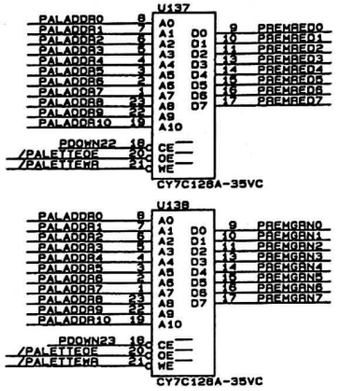

SOJ PACKAGE

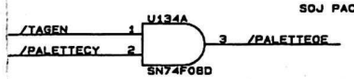

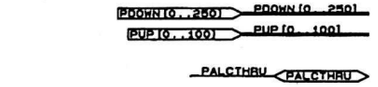

REV.	ENGRG CHANGE NO.	DWN	CHKD.	APP'D.	NO. DAY YR.
ORIGINAL ISSUE		SH			4-29-94

CHYRON CORPORATION
5 Hub Drive
Melville, New York 11747

TITLE: CHYRON ANCHOR
PIXEL DATA INTERFACE

SH. 2 OF 16

DOCUMENT NUMBER
PRE-PRODUCTION
2A01874

RGB X ALPHA MULTIPLIERS

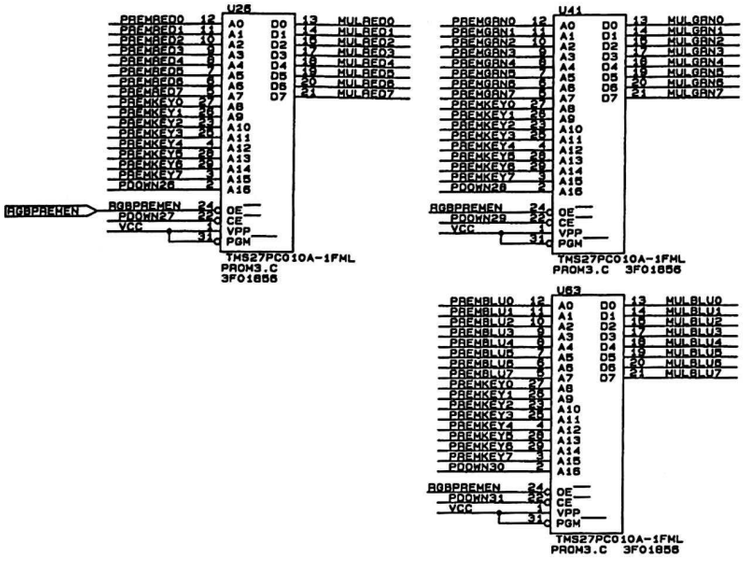

PREMULTIPLIED RGB BUFFERS

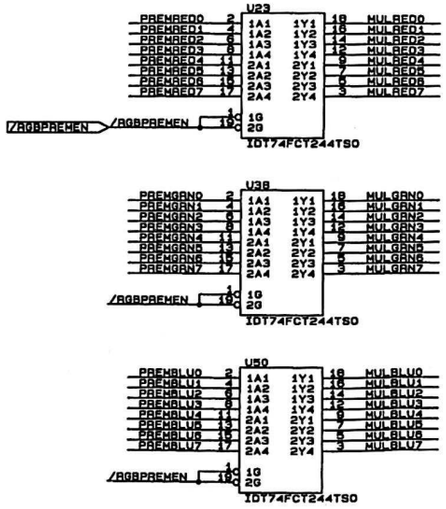

VRAM READ REGISTERS

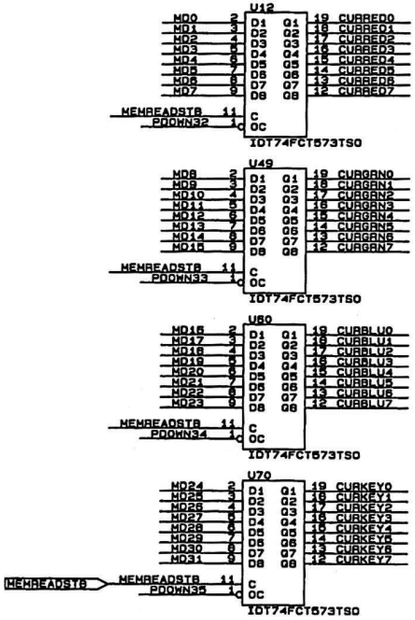

ALPHA EXTRACTOR

FOR VSB READS

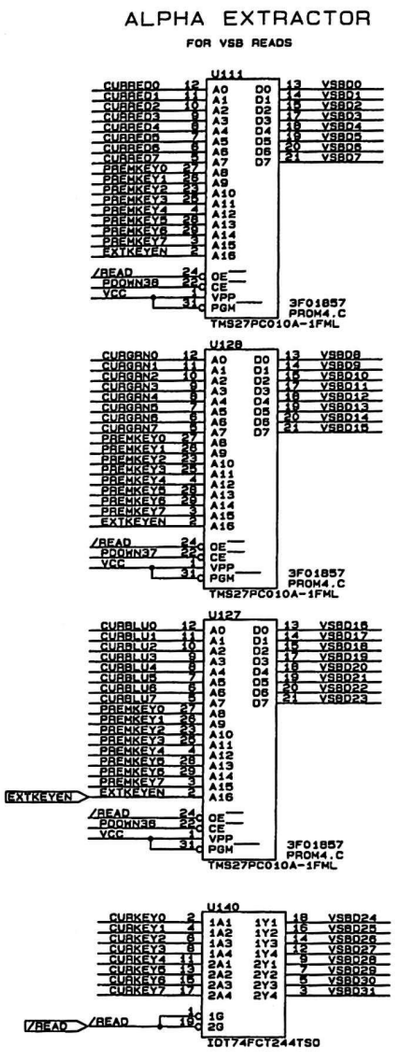

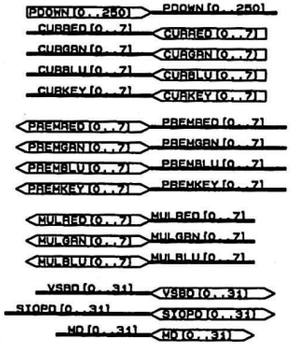

VRAM WRITE ONLY BUFFERS

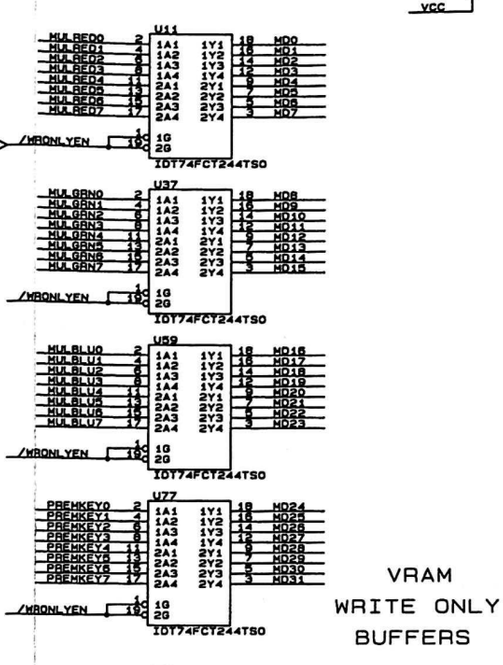

SIOP LOCAL READ BUFFERS

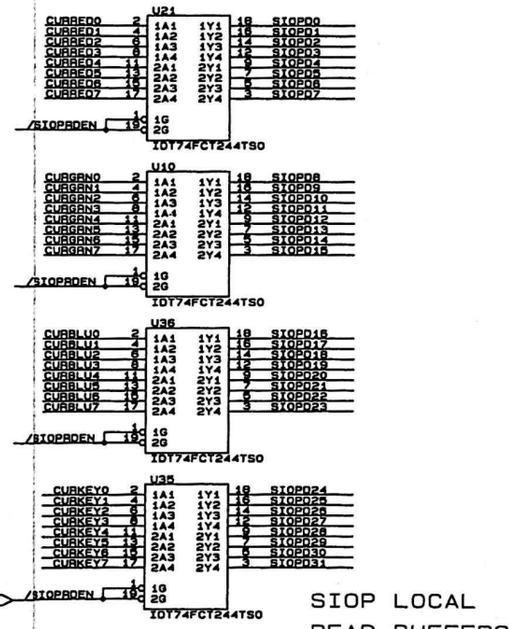

REV.	ENGRG CHANGE NO.	DWN	CHKD.	APP'D.	NO. DAY YR.
ORIGINAL ISSUE		SH			4-29-94

CHYRON CORPORATION
5 Hub Drive
Melville, New York 11747

TITLE: CHYRON ANCHOR
RGB AND ALPHA MULTIPLIERS

SH. 3 OF 16

DOCUMENT NUMBER
PRE-PRODUCTION
2A01874

CURRENT RGB MULTIPLIERS

CGRB X (1 - S-ALPHA)

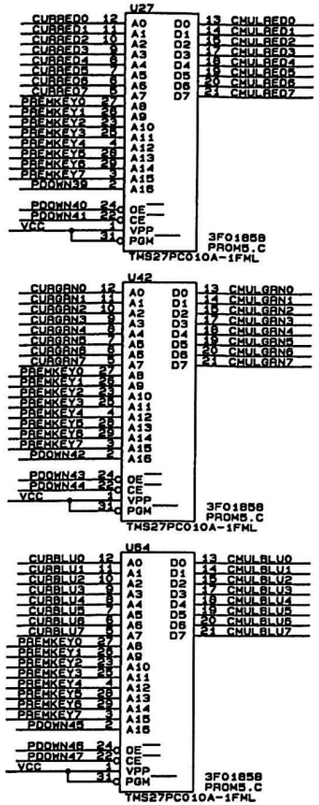

RMW ADDERS

MULRGB + CURRGB (1 - ALPHA)

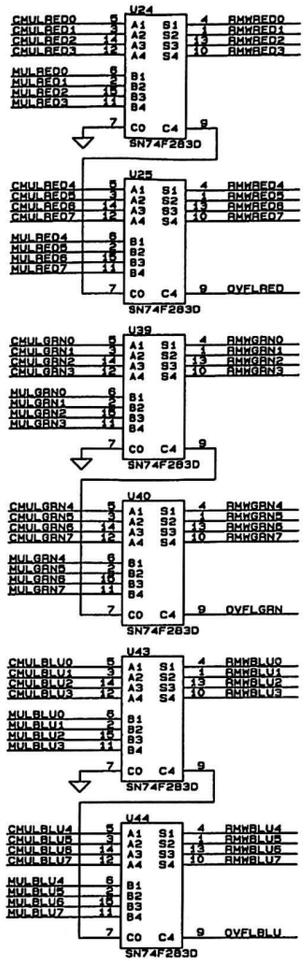

CARRY OUT IS USED TO ENSURE THAT THERE IS NO OVERFLOW.

RMW BUFFERS

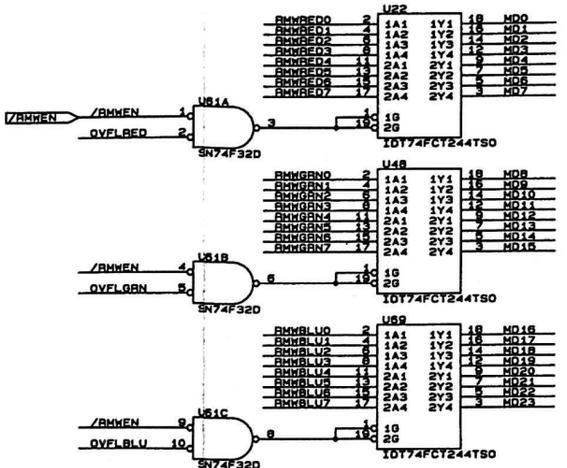

ALPHA MULTIPLIER

S-ALPHA + C-ALPHA (1 - S-ALPHA)

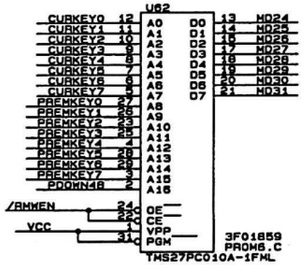

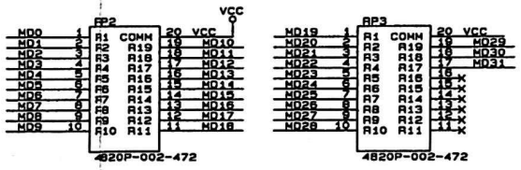

VRAM DATA BUS PULL-UPS

PDOWN[0..250] PDOWN[0..250]
PREMKEY[0..7] PREMKEY[0..7]
CURRED[0..7] CURRED[0..7]
CURGRN[0..7] CURGRN[0..7]
CURBLU[0..7] CURBLU[0..7]
CURKEY[0..7] CURKEY[0..7]
MULRED[0..7] MULRED[0..7]
MULGRN[0..7] MULGRN[0..7]
MULBLU[0..7] MULBLU[0..7]
MD[0..31] MD[0..31]

REV.	ENGRG CHANGE NO.	DWN	CHKD.	APP'D.	NO. DAY YR.
	ORIGINAL ISSUE	SH			4-29-94

CHYRON CORPORATION
5 Hub Drive
Melville, New York 11747

TITLE: CHYRON ANCHOR
RMW LOGIC

SH. 4 OF 16

DOCUMENT NUMBER
PRE-PRODUCTION
2A01874

JUMP TABLES

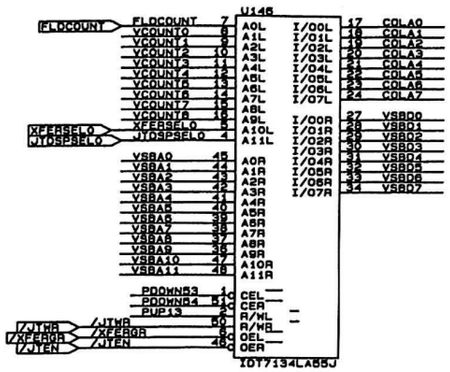

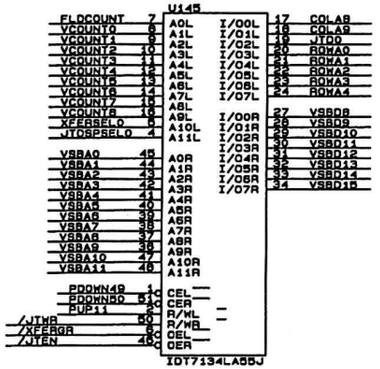

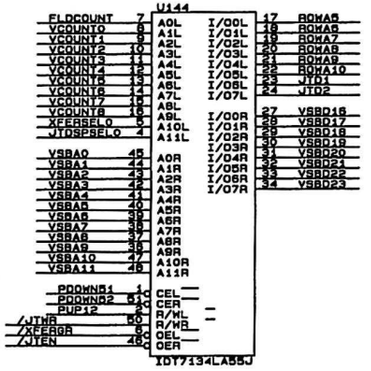

"/XFERGR" IS USED SO OUTPUTS OF JUMP TABLES CAN BE TRISTATED WITH OTHER ROW/COLUMN REGISTERS

NEED MECHANISM TO DISTINGUISH "BUFFER SELECT" DURING XFERS SO THAT THE FULL ADDRESS CAN GO TO THE ROW/COLUMN BUS.

PIXEL AND LINE ADDRESS COUNTERS

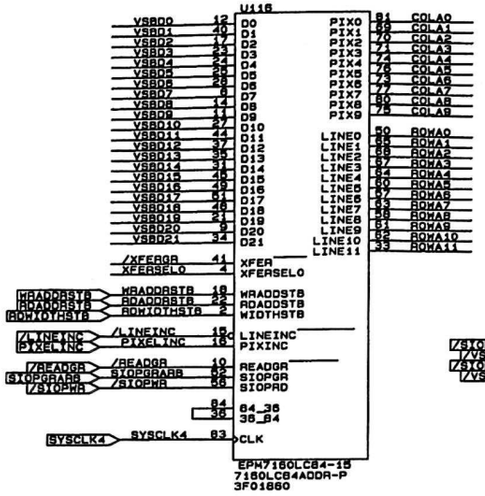

RDADDRSEL SHOULD BE IMPLICIT IN THE OPERATION.

ROW / COLUMN ADDRESS MUX

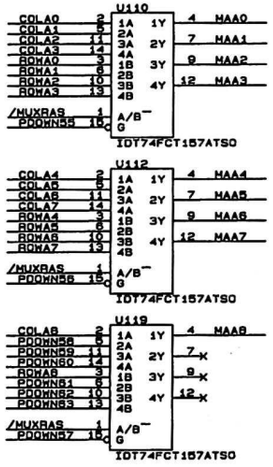

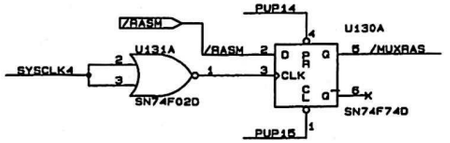

SCRIPTS RAM

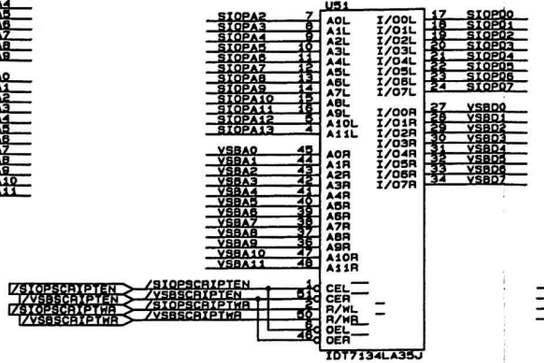

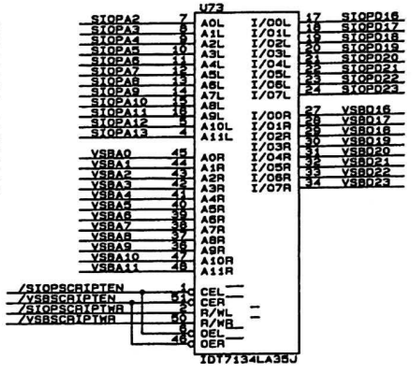

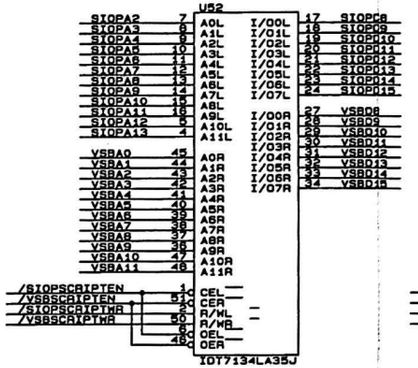

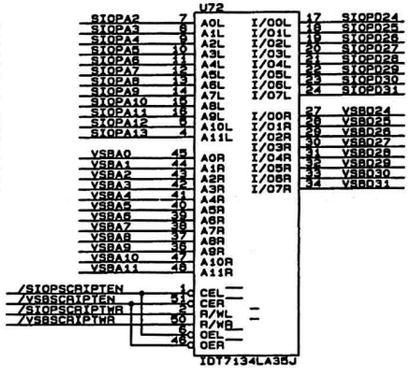

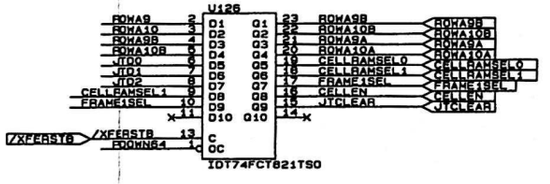

JUMP TABLE XFER DATA REGISTERS

REV.	ENGRG CHANGE NO.	DWN	CHKD.	APP'D.	NO. DAY YR.
ORIGINAL ISSUE		SH			4-29-94

CHYRON CORPORATION
5 Hub Drive
Melville, New York 11747

TITLE: CHYRON ANCHOR
JUMP TABLES

SH. 5 OF 16

DOCUMENT NUMBER
PRE-PRODUCTION
2A01874

SIOP

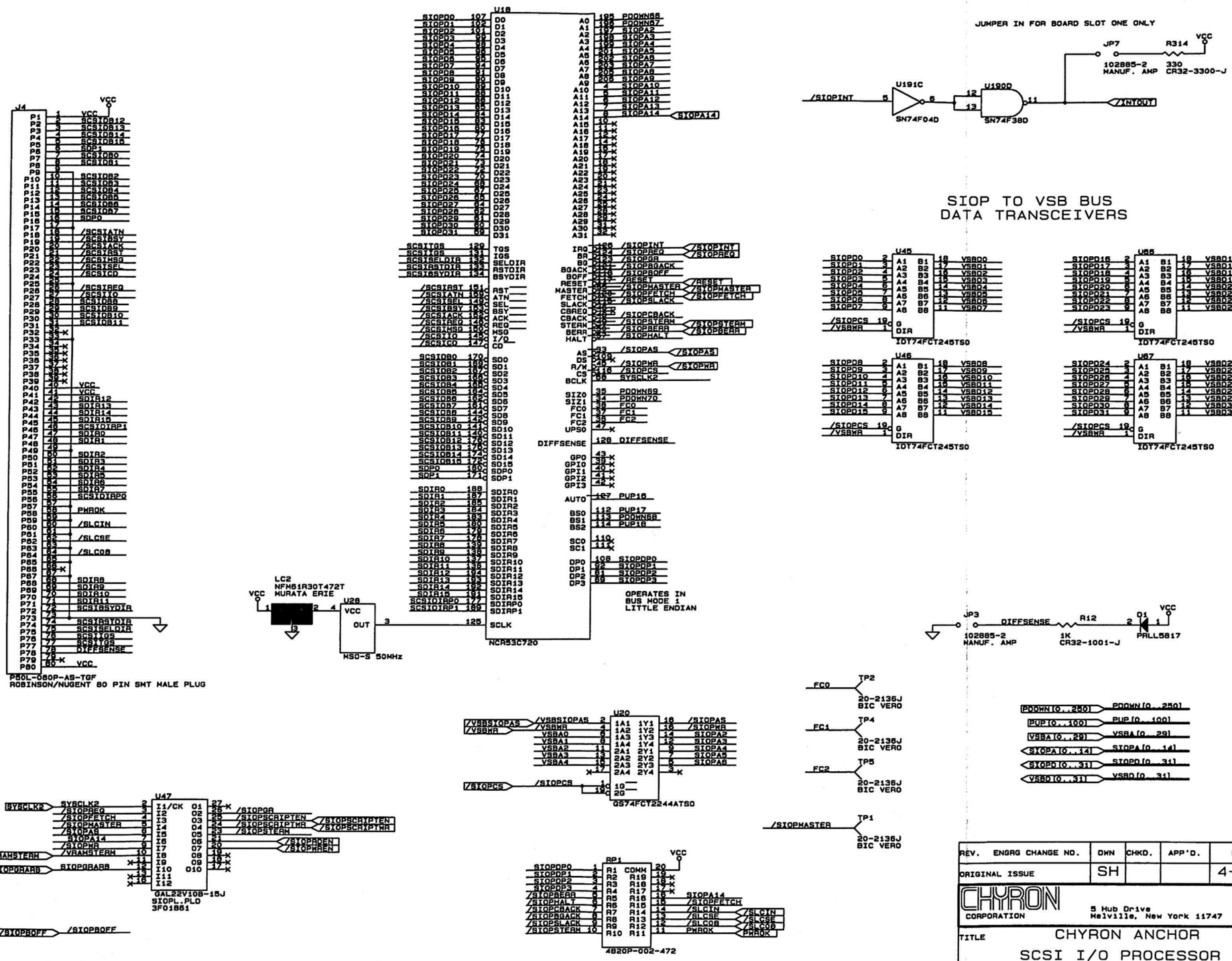

REV.	ENGRG CHANGE NO.	DWN	CHKD.	APP'D.	MO. DAY YR.
ORIGINAL ISSUE		SH			4-29-94

CHYRON CORPORATION
5 Hub Drive
Melville, New York 11747

TITLE: CHYRON ANCHOR
SCSI I/O PROCESSOR

DOCUMENT NUMBER: 2A01874
PRE-PRODUCTION

SH. 6 OF 16

BUS ARBITER

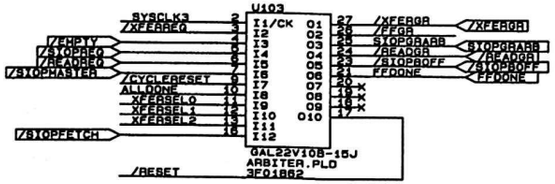

BUFFER

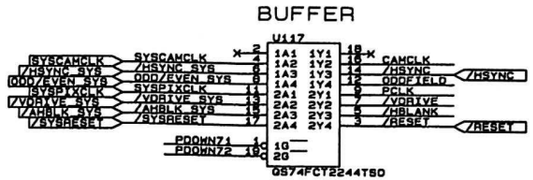

RAS PAL

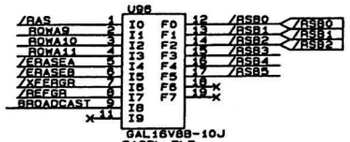

VRAM CONTROLLER

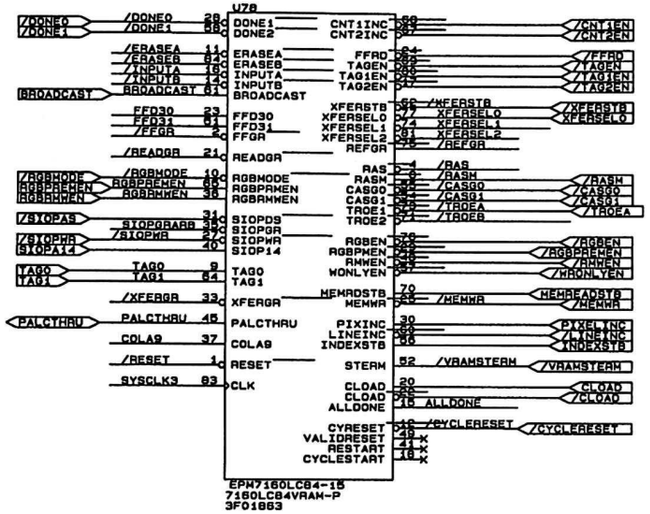

/VRAMSTERM
NOT TRI-ST.

H COUNTER AND SOE GENERATOR

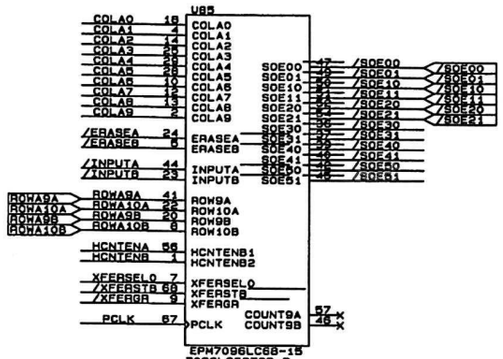

PIXEL CLOCK BUFFERS

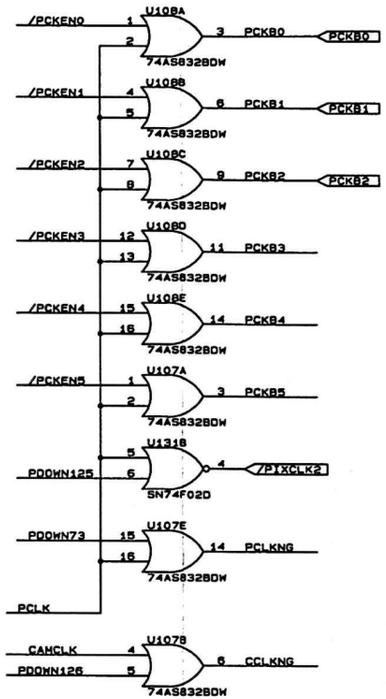

MEZZANINE CONNECTOR

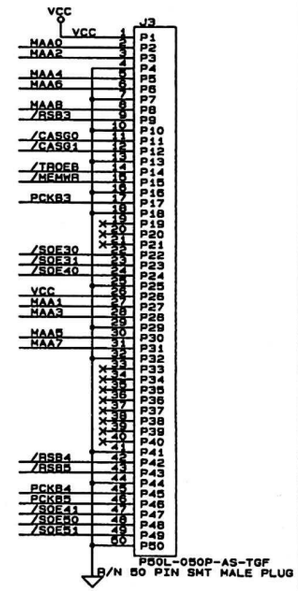

PIXEL CLOCK CONTROL

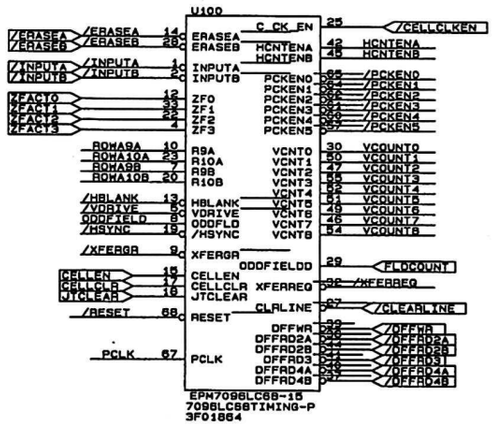

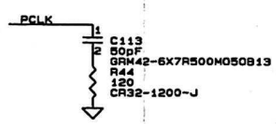

PIX CLOCK DRIVER

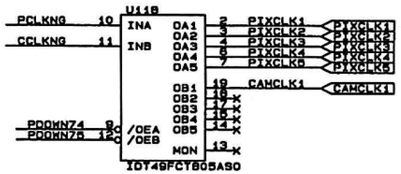

SYS CLOCK DRIVER

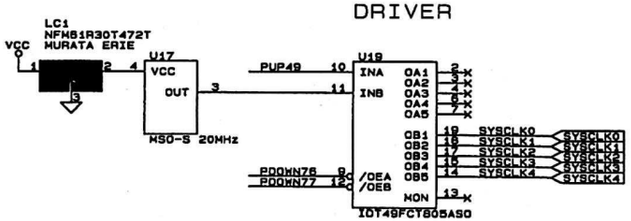

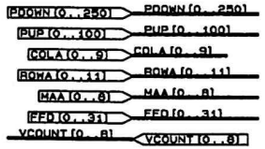

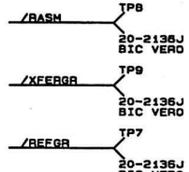

REV.	ENGRG CHANGE NO.	DWN	CHKD.	APP'D.	NO. DAY YR.
	ORIGINAL ISSUE	SH			4-29-94

CHYRON CORPORATION
5 Hub Drive
Melville, New York 11747

TITLE: CHYRON ANCHOR
VRAM CONTROLLER & ARBITER

SH. 7 OF 16

DOCUMENT NUMBER
PRE-PRODUCTION
2A01874

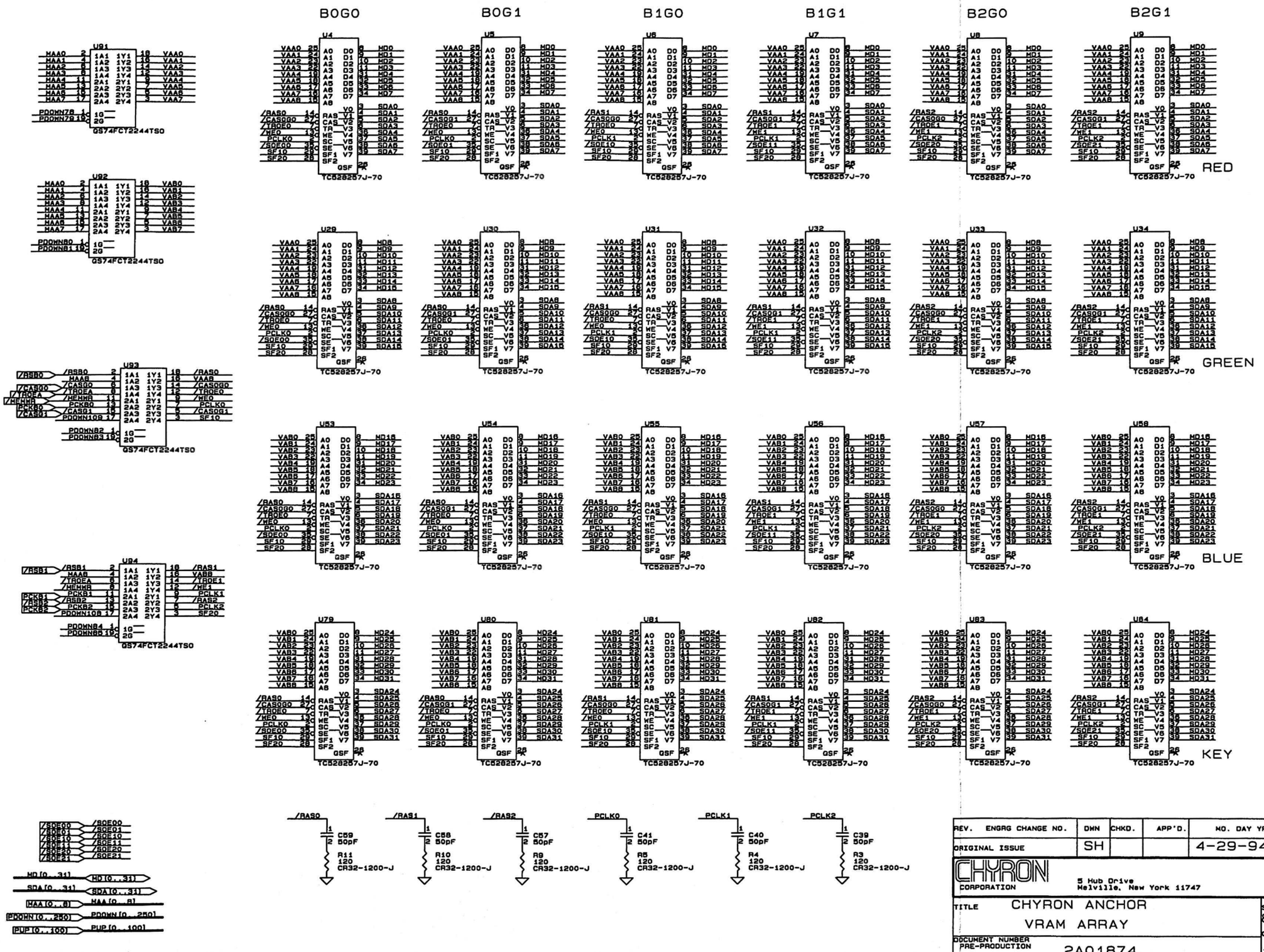

REV.	ENGRG CHANGE NO.	DWN	CHKD.	APP'D.	NO. DAY YR.
ORIGINAL ISSUE		SH			4-29-94

CHYRON CORPORATION
5 Hub Drive
Melville, New York 11747

TITLE: CHYRON ANCHOR
VRAM ARRAY

SH. 8 OF 16

DOCUMENT NUMBER
PRE-PRODUCTION
2A01874

KEY SCALERS

8 BITS TO 9 BITS

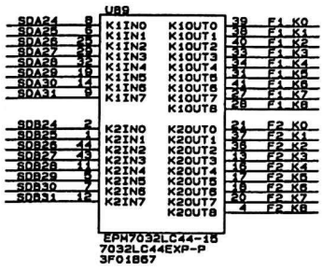

M1*K1

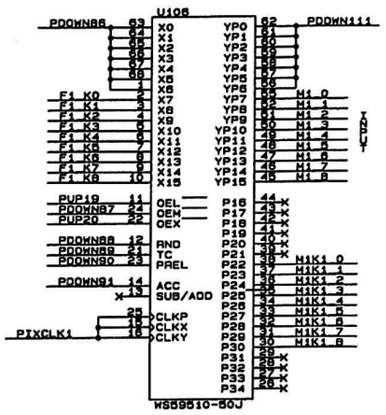

1-M1K1

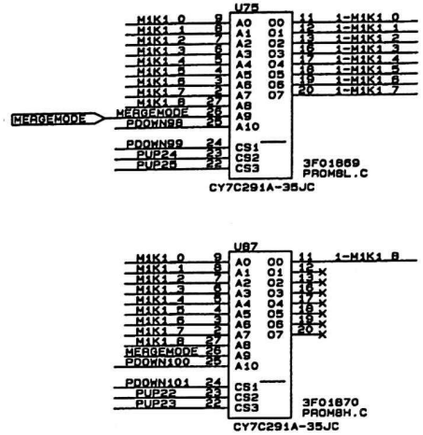

1-M1K1 = 1 - M1K1 OR "1"
DEPENDING ON MERGE MODE.

C2 = M2*(1-M1K1)

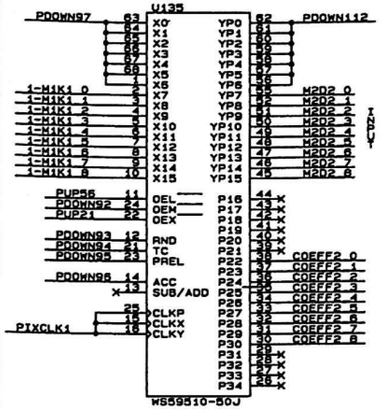

COEFF2 = (1-M1K1)*M2
OR COEFF2 = M2
DEPENDING ON MERGE MODE.

COEFF MUX CONTROL

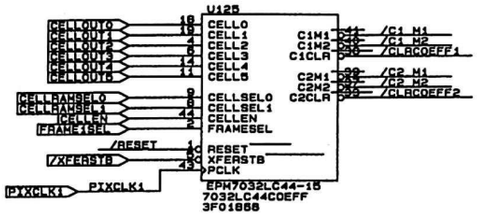

MERGE REGISTERS

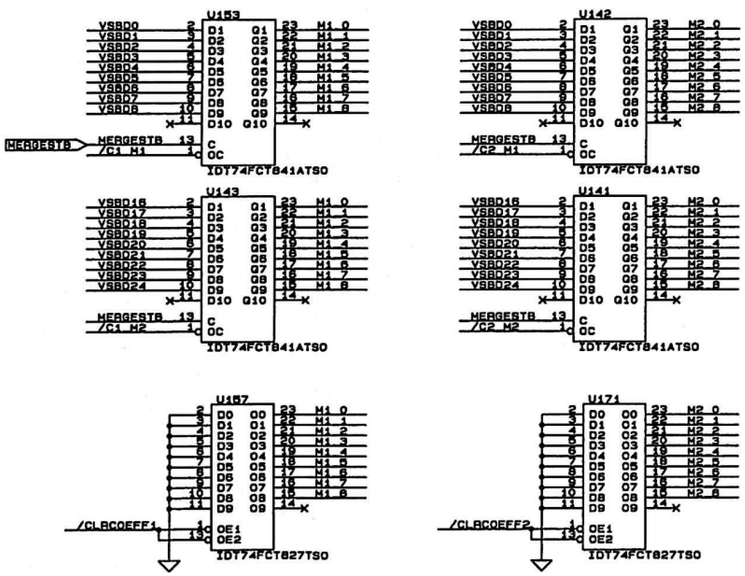

M1K1 DELAY FIFO

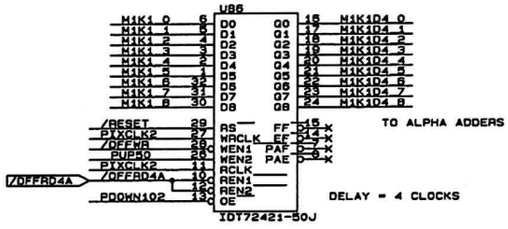

M1 DELAY FIFO

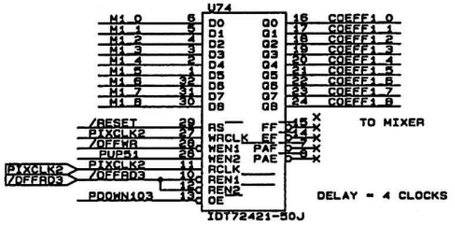

M2 DELAY FIFO

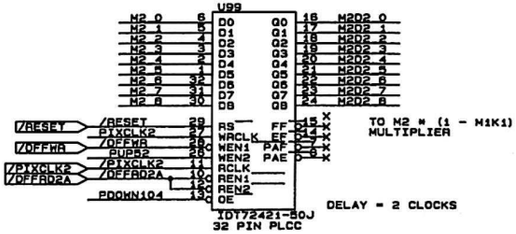

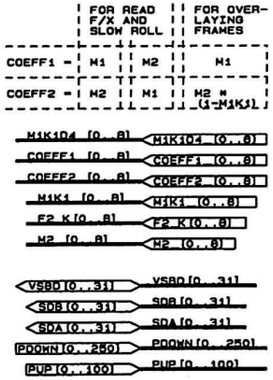

REV.	ENGRG CHANGE NO.	DWN	CHKD.	APP'D.	MO. DAY YR.
ORIGINAL ISSUE		SH			4-29-94

CHYRON CORPORATION
5 Hub Drive
Melville, New York 11747

TITLE: CHYRON ANCHOR
COEFFICIENT GENERATOR

SH. 9 OF 16

DOCUMENT NUMBER
PRE-PRODUCTION 2A01874

K2 DELAY FIFO

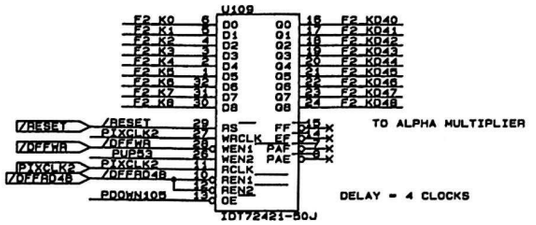

TO ALPHA MULTIPLIER

ADDER

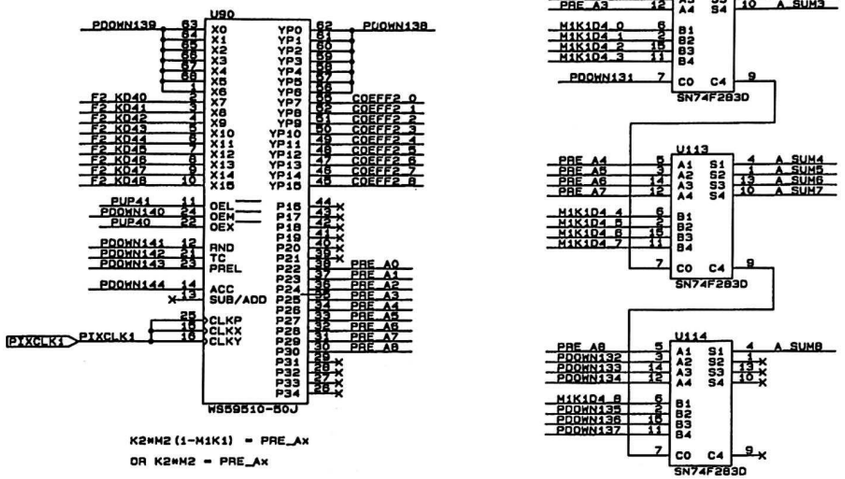

K2*M2(1-M1K1) = PRE_Ax

OR K2*M2 = PRE_Ax

UNSCALING PROM
(9bits TO 8bits)

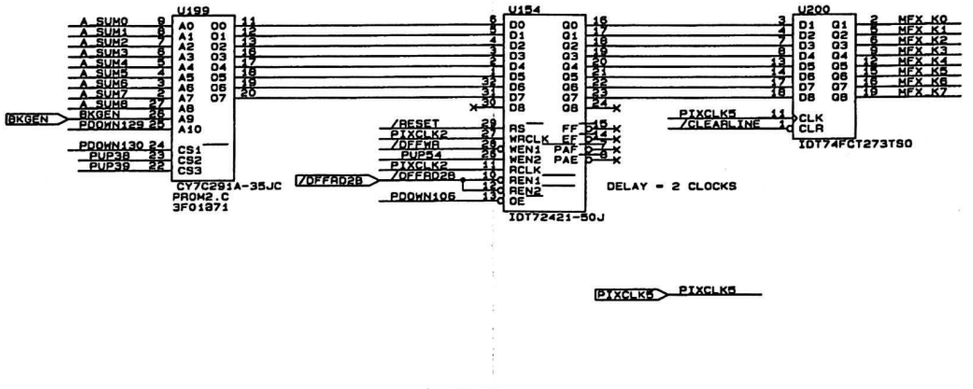

PIXCLK5 PIXCLK5

/CLEARLINE /CLEARLINE

RGB DELAY REGISTERS

DELAY = 4 CLOCKS

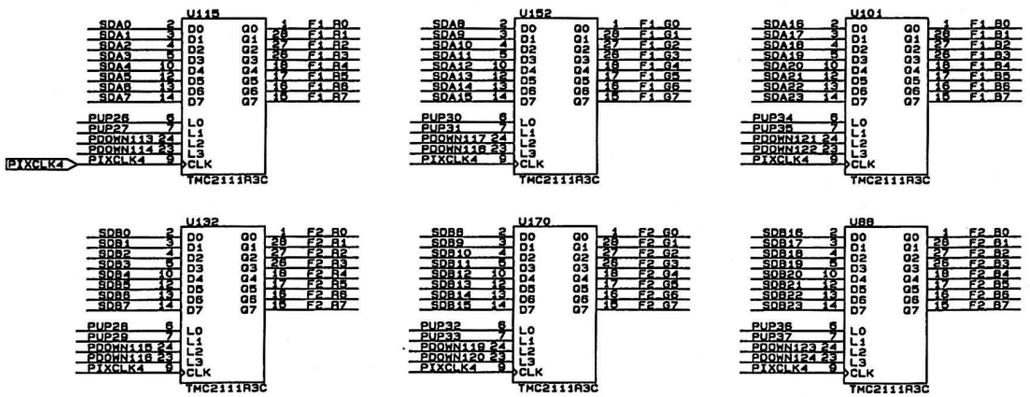

PDOWN[0..25] PDOWN[0..25]
PUP[0..10] PUP[0..10]
M1K1D4[0..8] M1K1D4[0..8]
F2 K[0..8] F2 K[0..8]
M1K1[0..8] M1K1[0..8]
COEFF2[0..8] COEFF2[0..8]
F1 R[0..7] F1 R[0..7]
F1 G[0..7] F1 G[0..7]
F1 B[0..7] F1 B[0..7]
F2 R[0..7] F2 R[0..7]
F2 G[0..7] F2 G[0..7]
F2 B[0..7] F2 B[0..7]
MFX K[0..7] MFX K[0..7]
SDA[0..31] SDA[0..31]
SDB[0..31] SDB[0..31]

REV.	ENGRG CHANGE NO.	DWN	CHKD.	APP'D.	NO. DAY YR.
ORIGINAL ISSUE		TF			4-29-94

CHYRON CORPORATION
5 Hub Drive
Melville, New York 11747

TITLE: CHYRON ANCHOR
ALPHA GENERATOR

SH. 10 OF 16

DOCUMENT NUMBER
PRE-PRODUCTION
2A01874

VIDEO INPUT REGISTERS

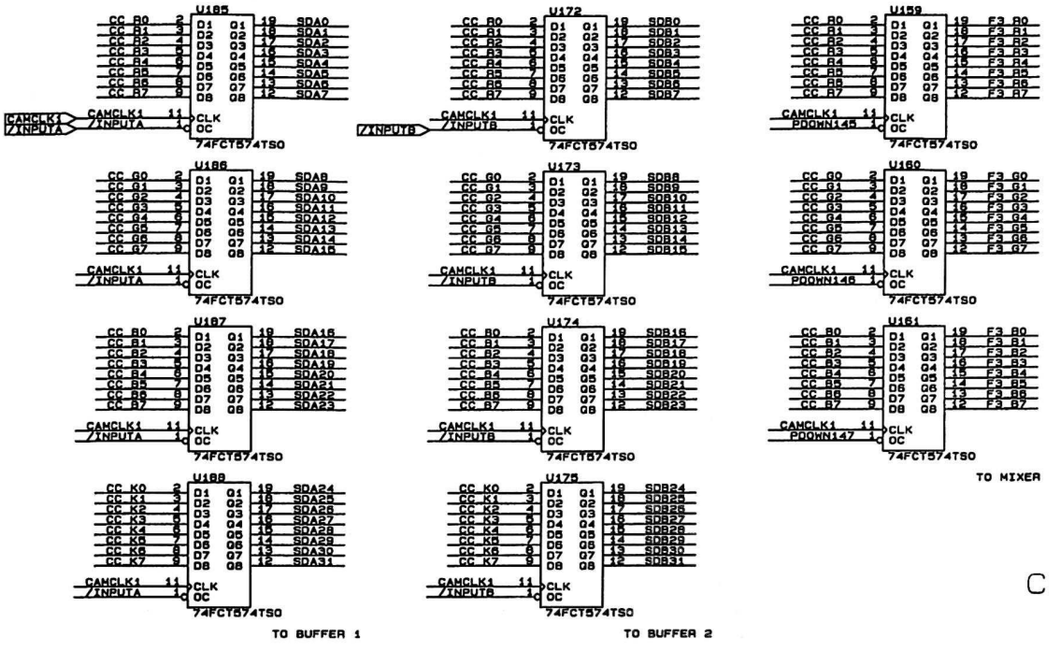

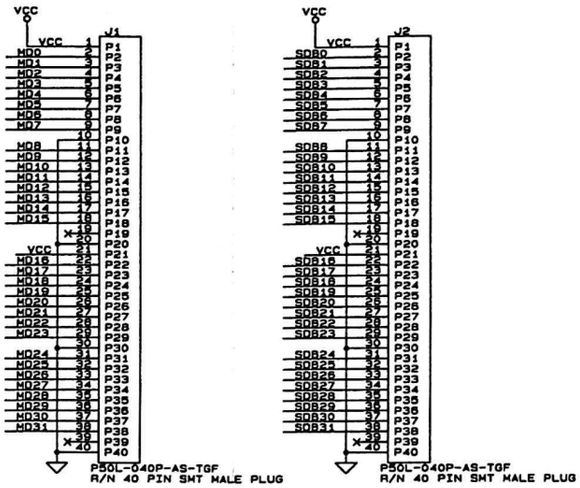

CELL RAM

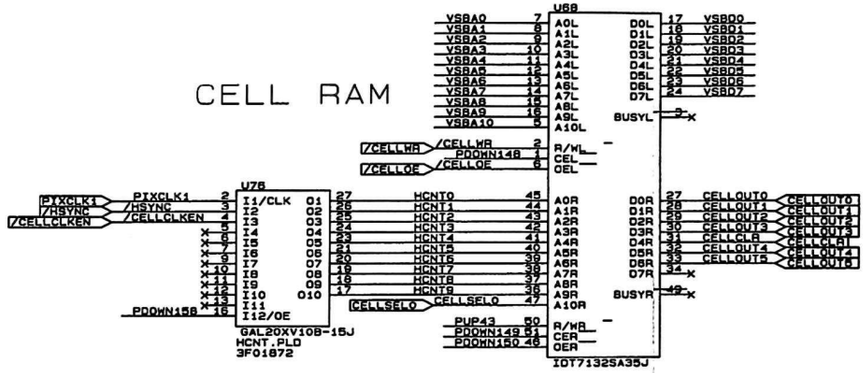

BACKGROUND COEFFICIENT GENERATOR

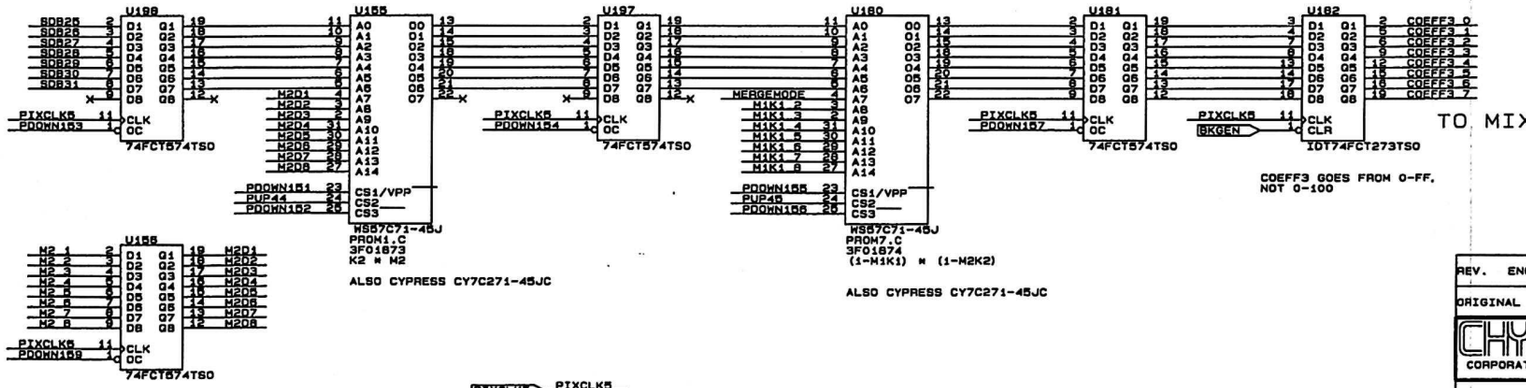

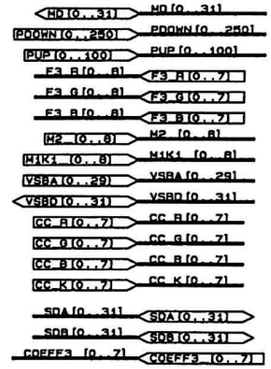

REV.	ENGRG CHANGE NO.	DWN	CHKD.	APP'D.	NO. DAY YR.
ORIGINAL ISSUE		SH			4-29-94

CHYRON CORPORATION
5 Hub Drive
Melville, New York 11747

TITLE: CHYRON ANCHOR
VIDEO INPUT REGISTERS

SH. 11 OF 16

DOCUMENT NUMBER
PRE-PRODUCTION 2A01874

RED MIXER

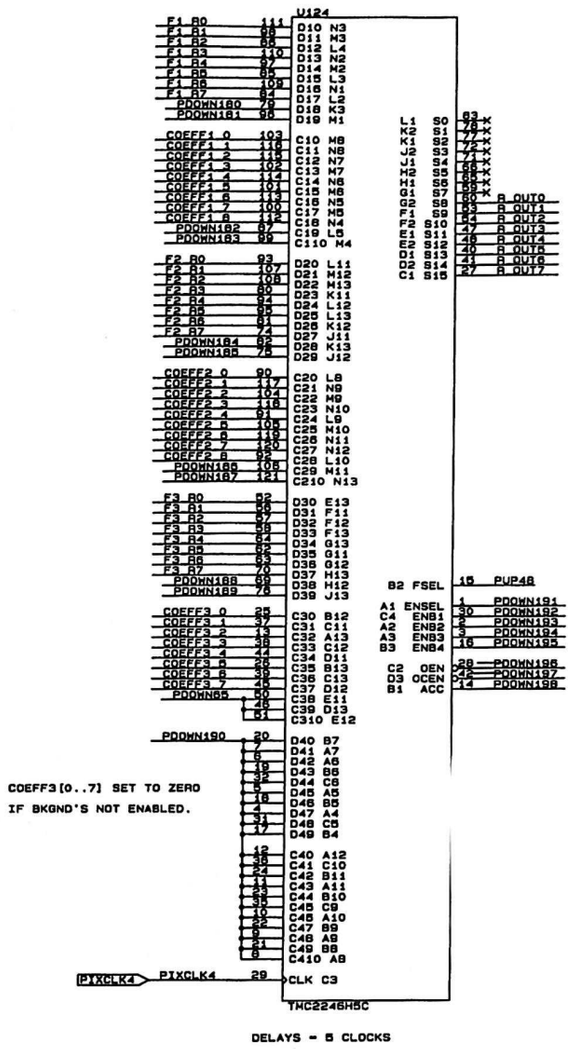

COEFF3[0..7] SET TO ZERO
IF BKGND'S NOT ENABLED.

DELAYS = 5 CLOCKS

GREEN MIXER

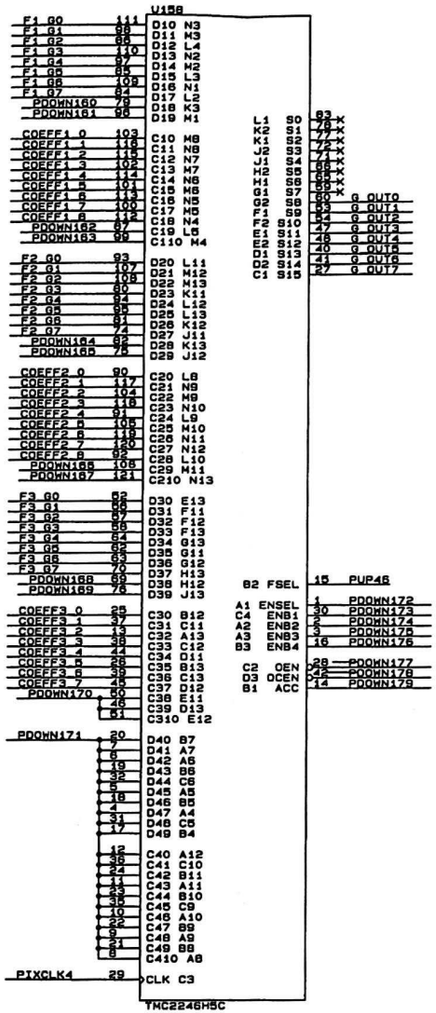

BLUE MIXER

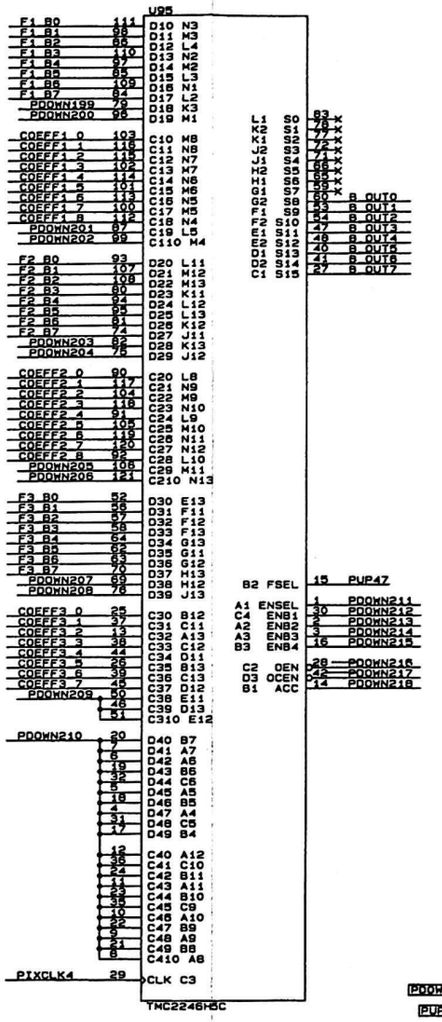

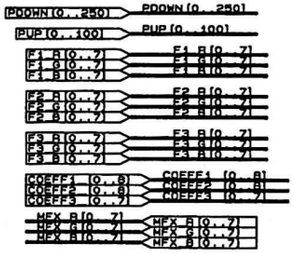

RGB OUT TO MIX F/X BOARD

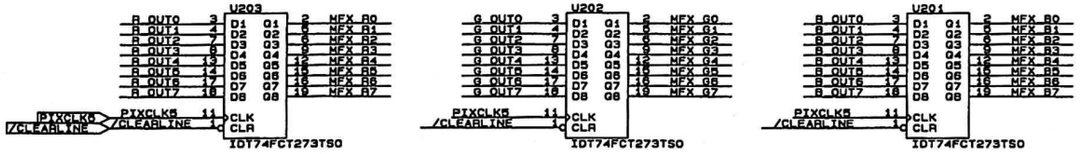

REV.	ENGRG CHANGE NO.	DWN	CHKD.	APP'D.	NO. DAY YR.
ORIGINAL ISSUE		SH			4-29-94

CHYRON CORPORATION
5 Hub Drive
Melville, New York 11747

TITLE	CHYRON ANCHOR OUTPUT MIXER	SH. 12 OF 16
DOCUMENT NUMBER	2A01874	
PRE-PRODUCTION		

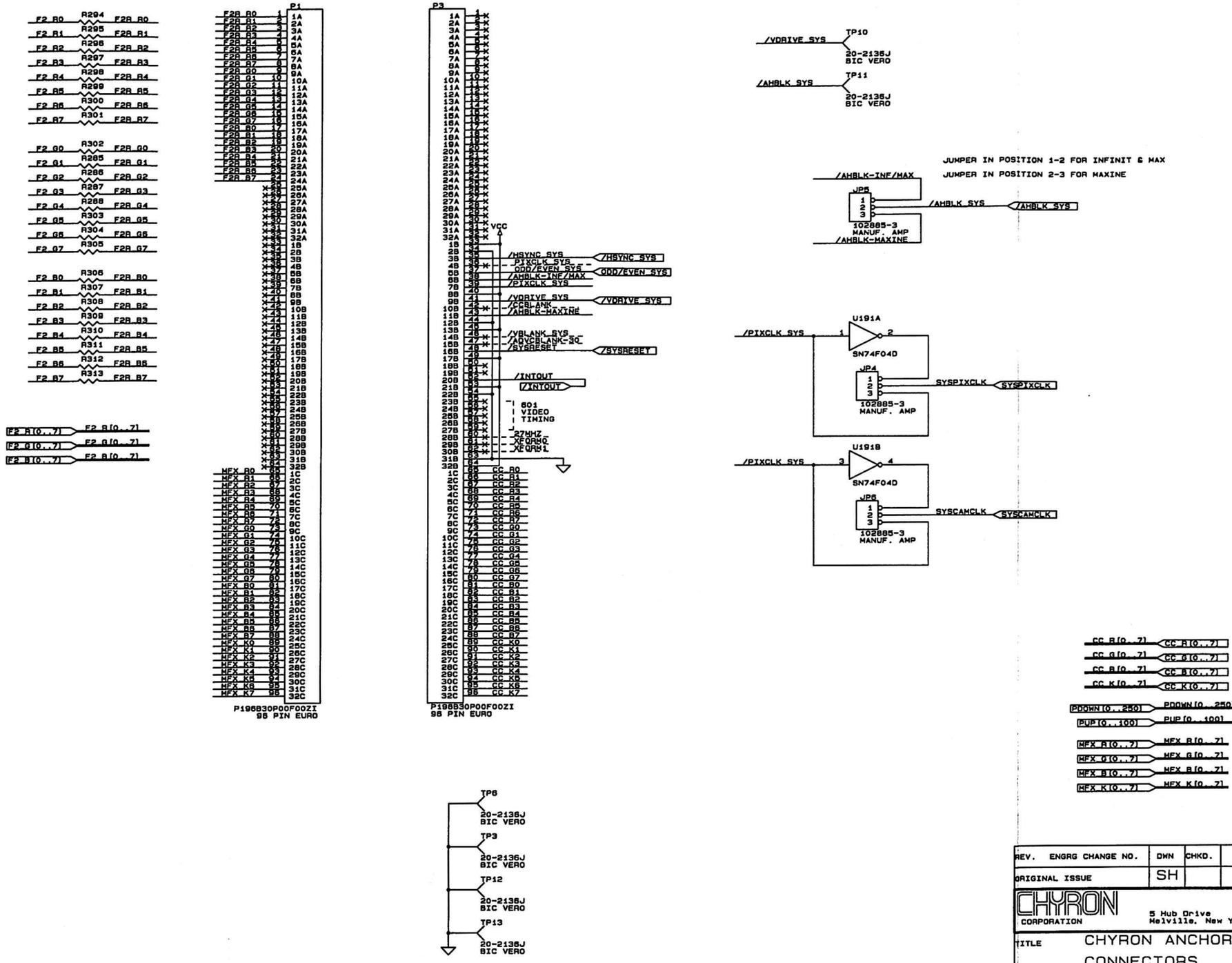

REV.	ENGRG CHANGE NO.	DWN	CHKD.	APP'D.	MO. DAY YR.
	ORIGINAL ISSUE	SH			4-29-94

CHYRON CORPORATION
5 Hub Drive
Melville, New York 11747

TITLE: CHYRON ANCHOR CONNECTORS

SH. 13 OF 16

DOCUMENT NUMBER
PRE-PRODUCTION
2A01874

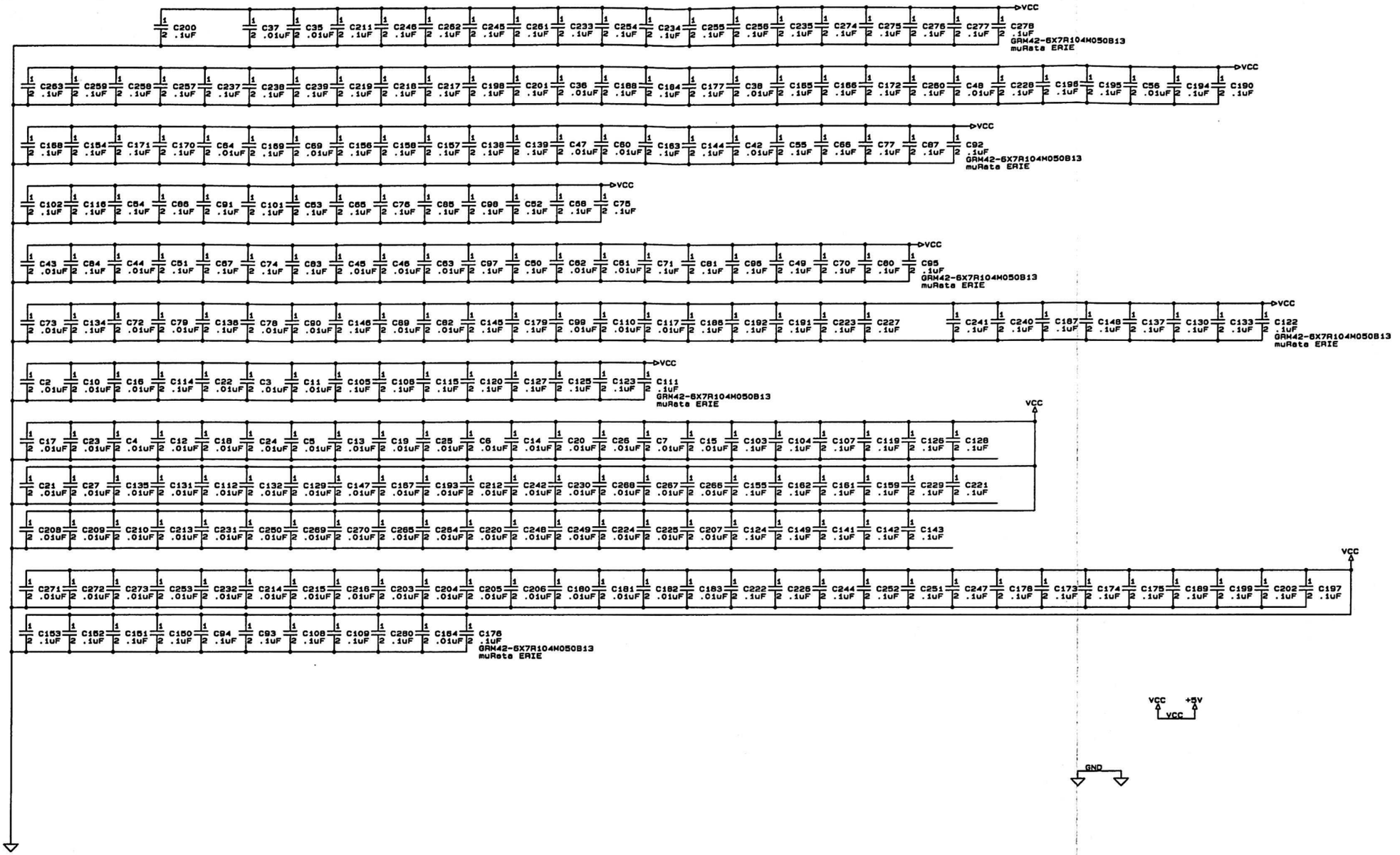

REV.	ENGRG CHANGE NO.	DWN	CHKD.	APP'D.	MO. DAY YR.
ORIGINAL ISSUE		TF			6-7-94

CHYRON CORPORATION
5 Hub Drive
Melville, New York 11747

TITLE: CHYRON ANCHOR CAPS ETC

SH. 14 OF 16

DOCUMENT NUMBER
PRE-PRODUCTION 2A01874

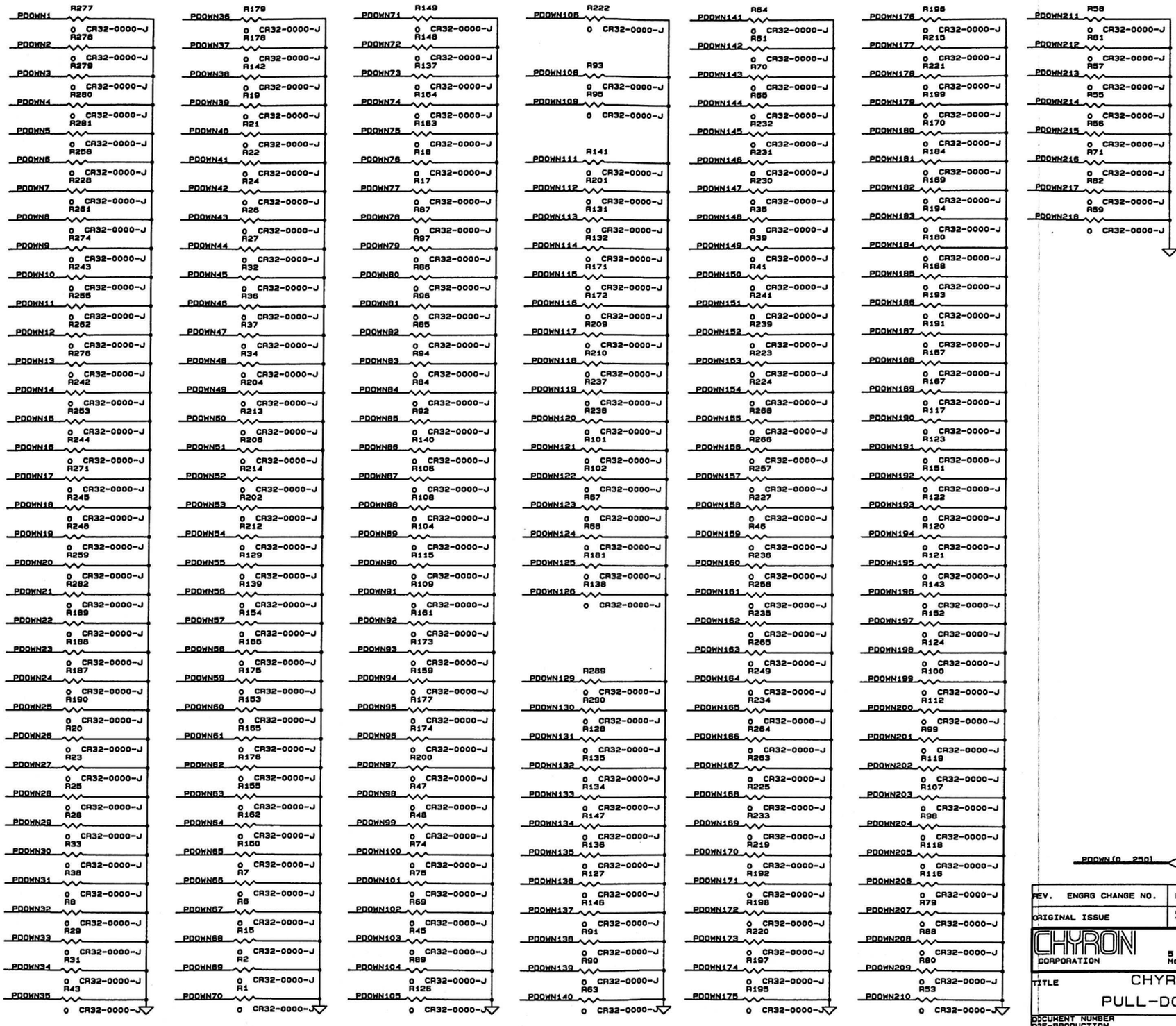

REV.	ENGRG CHANGE NO.	DWN	CHKD.	APP'D.	MO. DAY YR.
ORIGINAL ISSUE		SH			4-29-94

CHYRON CORPORATION
5 Hub Drive
Melville, New York 11747

TITLE: CHYRON ANCHOR
PULL-DOWN RESISTORS

SH. 15 OF

DOCUMENT NUMBER
PRE-PRODUCTION
2A01874

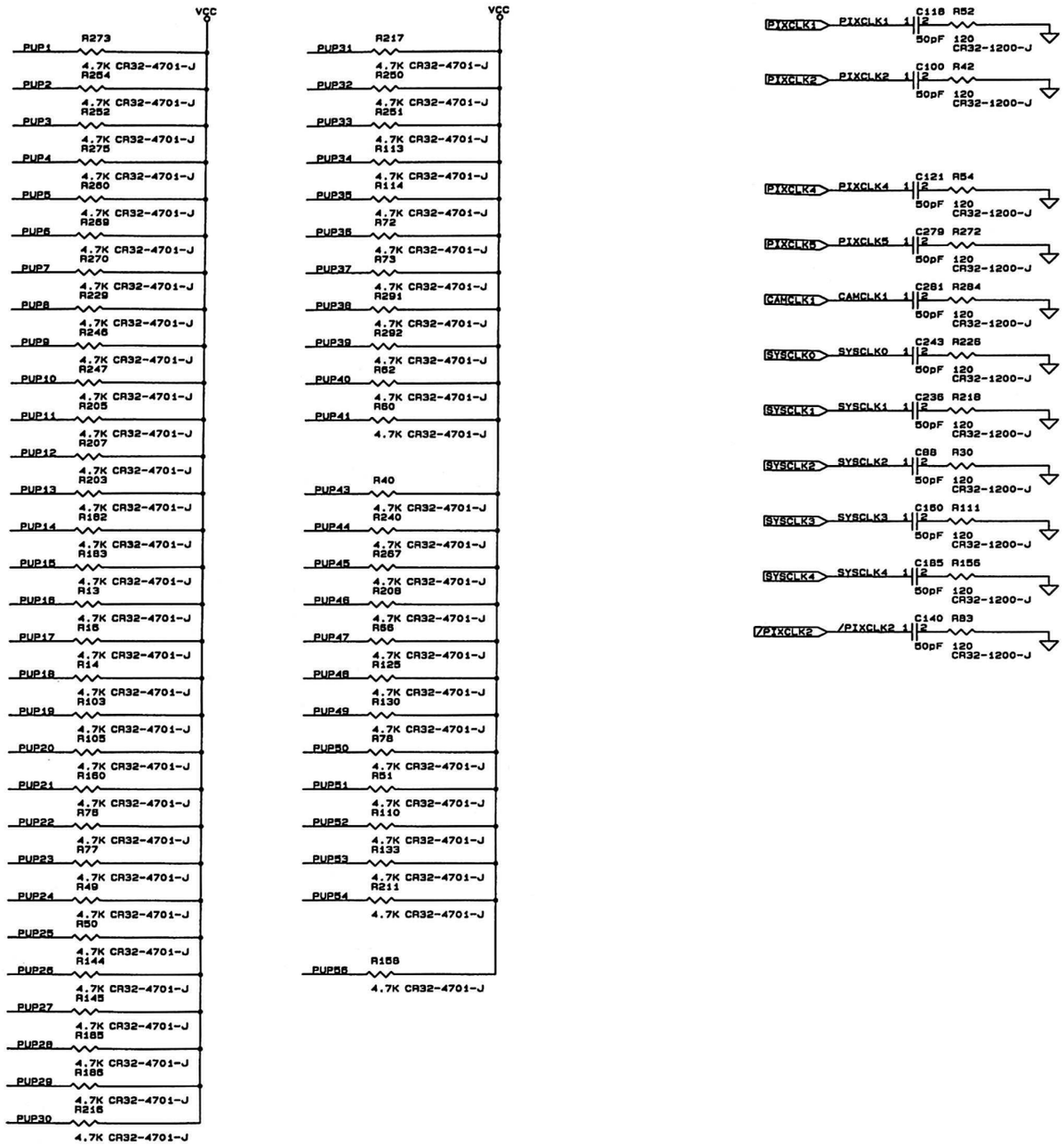

REV.	ENGRG CHANGE NO.	DWN	CHKD.	APP'D.	MO. DAY YR.
ORIGINAL ISSUE		SH			4-29-94

CHYRON CORPORATION
5 Hub Drive
Melville, New York 11747

TITLE: CHYRON ANCHOR
PULL-UP RESISTORS

SH. 16 OF 16

DOCUMENT NUMBER
PRE-PRODUCTION
2A01874

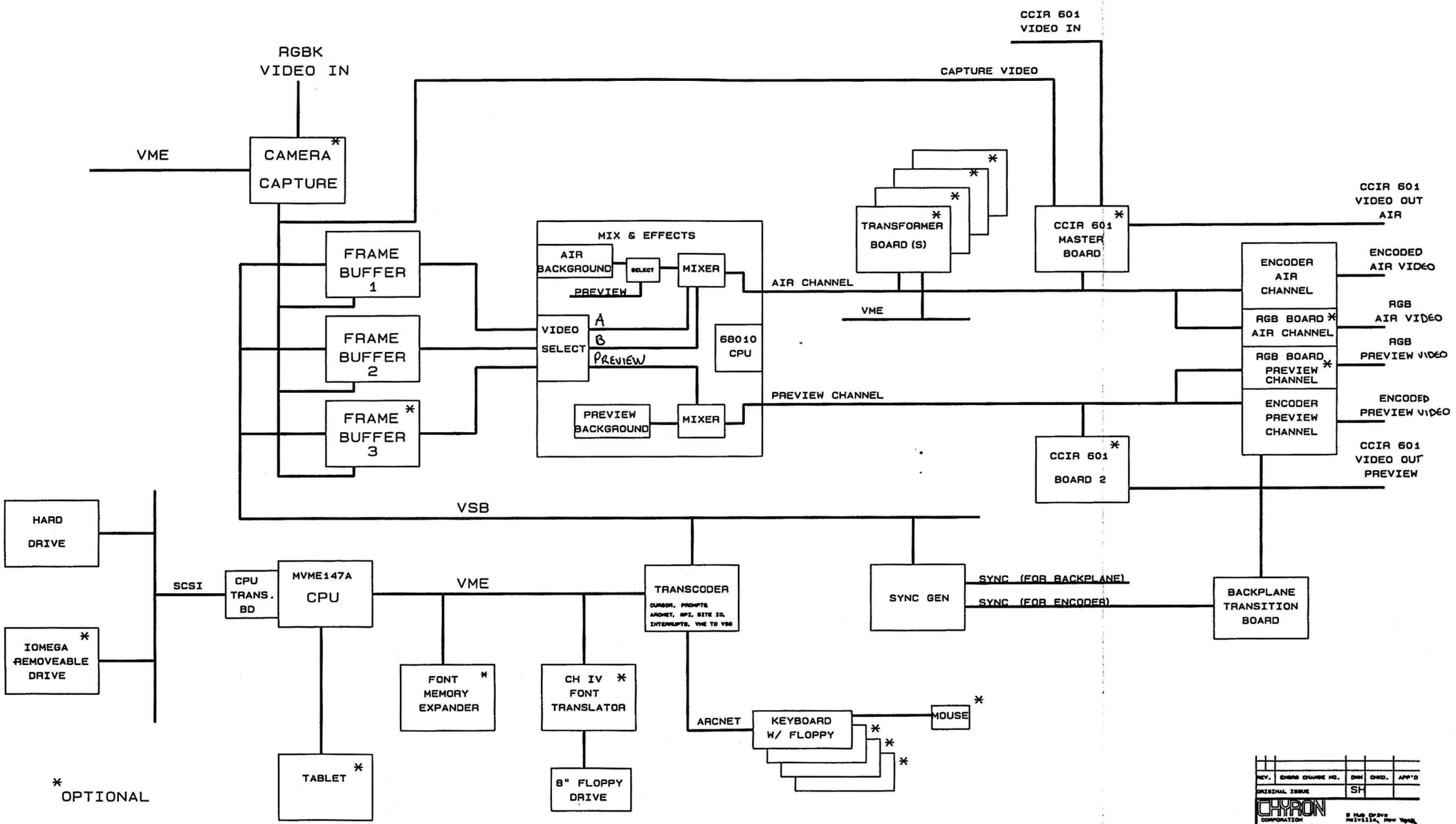
CCIR 601
VIDEO IN
RGBK
VIDEO IN
CAPTURE VIDEO
VME
CAMERA *
CAPTURE
TRANSFORMER
BOARD (S) *
CCIR 601
MASTER
BOARD *
CCIR 601
VIDEO OUT
AIR
FRAME
BUFFER
1
FRAME
BUFFER
2
FRAME
BUFFER
3 *
MIX & EFFECTS
AIR
BACKGROUND
SELECT
MIXER
PREVIEW
VIDEO
SELECT
A
B
PREVIEW
68010
CPU
PREVIEW
BACKGROUND
MIXER
AIR CHANNEL
VME
PREVIEW CHANNEL
ENCODER
AIR
CHANNEL
ENCODED
AIR VIDEO
RGB BOARD *
AIR CHANNEL
RGB
AIR VIDEO
RGB BOARD
PREVIEW
CHANNEL *
RGB
PREVIEW VIDEO
ENCODER
PREVIEW
CHANNEL
ENCODED
PREVIEW VIDEO
CCIR 601
BOARD 2 *
CCIR 601
VIDEO OUT
PREVIEW
VSB
HARD
DRIVE
SCSI
CPU
TRANS.
BD
MVME147A
CPU
VME
TRANSCODER
CURSOR, PROMPTS
ARCNET, SPI, SITE ID,
INTERRUPTS, VME TO VSB
SYNC GEN
SYNC (FOR BACKPLANE)
SYNC (FOR ENCODER)
BACKPLANE
TRANSITION
BOARD
IOMEGA
REMOVEABLE
DRIVE *
FONT
MEMORY
EXPANDER *
CH IV *
FONT
TRANSLATOR
ARCNET
KEYBOARD
W/ FLOPPY *
MOUSE *
TABLET *
8" FLOPPY
DRIVE
* OPTIONAL
REV.
ENGRG CHANGE NO.
DWN
CHKD.
APP'D
ORIGINAL ISSUE
SH
CHYRON
CORPORATION
5 Hub Drive
Melville, New York
TITLE
INFINIT
SYSTEM BLOCK DIAG
DOCUMENT NUMBER
2401727

DUAL SCRIBE BOARD LOCATIONS

VIEW FROM BACK

OF CHASSIS

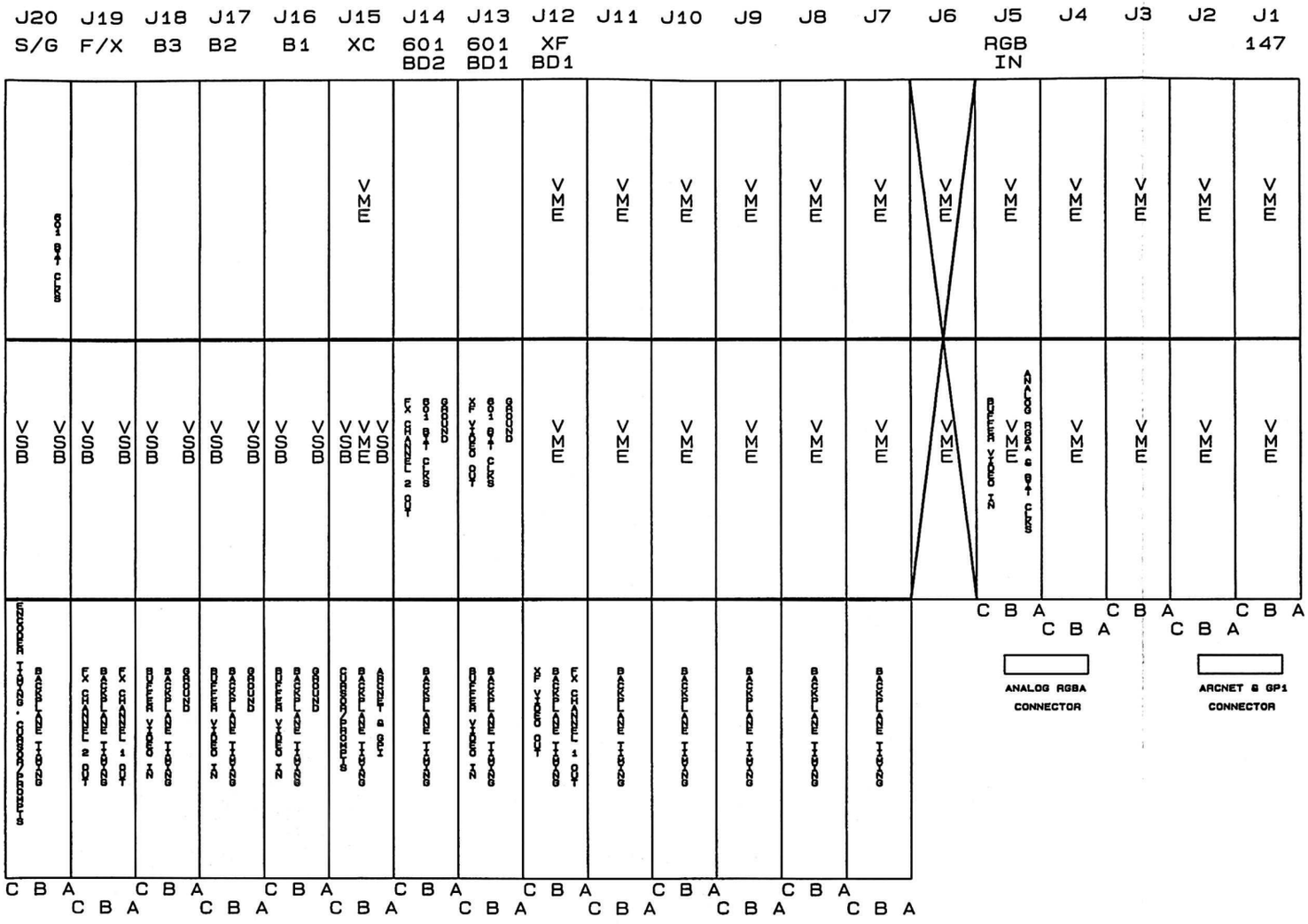

J1: VME 147
J2: SPARE
J3: SPARE
J4: SPARE
J5: RGBA INPUT
J6: UNAVAILABLE
J7: SPARE
J8: SPARE
J9: SPARE
J10: SPARE
J11: SPARE
J12: TRANSFORMER MASTER
J13: 601 MASTER
J14: 601 BD 2
J15: TRANSCODER
J16: FRAME BUFFER 1
J17: FRAME BUFFER 2
J18: FRAME BUFFER 3
J19: EFFECTS BOARD
J20: SYNC GEN

REV.	ENGRG CHANGE NO.	DWN	CHKD.	APP'D.	MO. DAY YR.
ORIGINAL ISSUE		SH			9-14-89

CHYRON CORPORATION
5 Hub Drive
Melville, New York 11747

TITLE: INFINITI BACKPLANE TRANSITION BOARD PLACEMENT

SH. 1 OF 1

DOCUMENT NUMBER: 2A01728 REV. A

INFINIT! CAMERA CAPTURE BLOCK DIAGRAM

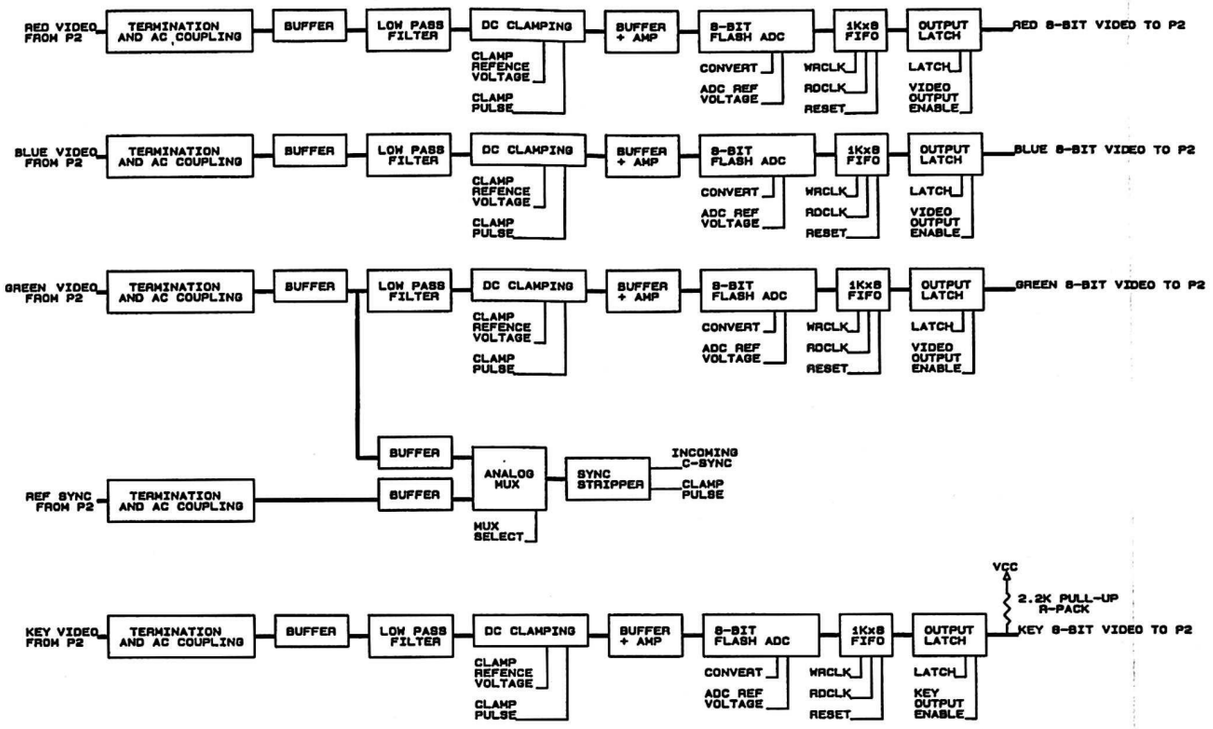

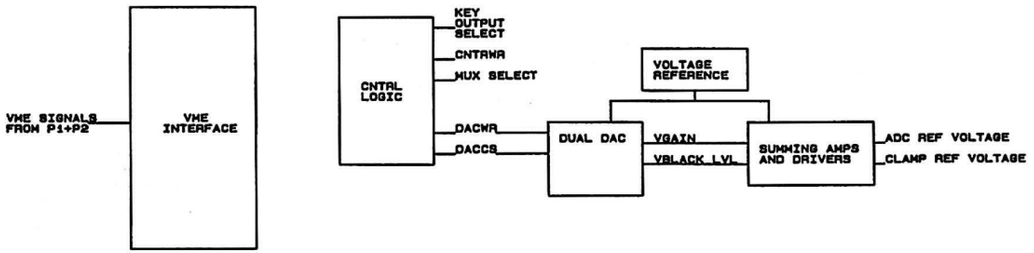

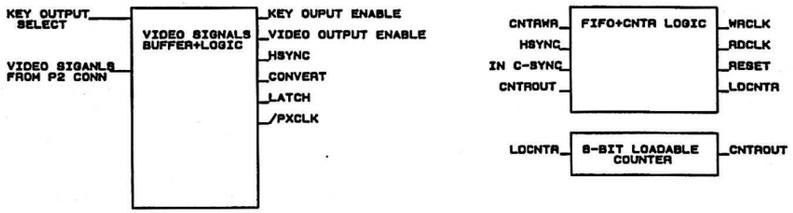

REV.	ENGRG CHANGE NO.	DWN	CHKD.	APP'D.	MO. DAY YR.
ORIGINAL ISSUE		MM			10-29-80

CHYRON CORPORATION
5 Hub Drive
Melville, New York 11747

TITLE: INFINIT! CAMERA CAPTURE BLOCK DIAGRAM

DOCUMENT NUMBER: 2A01729

SHEET 1 OF 1

CHANNEL 1 = PRIMARY
CHANNEL 2 = SECONDARY
CHANNEL 3 = UNMODIFIED

DATA SELECT

NOTE:
ALL VIDEO BUSES ARE DEFINED FOR REG ONLY.

RGB DATA DELAY

PIPELINE REGISTERS

CHANNEL 3 BACKGROUND KEY COEFFICIENT GENERATOR

KEY SET TO "FF" IF BACKGROUNDS ARE ENABLED.

CHANNEL 3 VIDEO MIXERS

SPEC'D AT 30MHz

MULTIPLIER

ADDER

MUX

OUTPUT VIDEO SOURCE MUXES

CH1 COEFFICIENT DELAY REGISTER

MAIN CHANNEL BACKGROUND KEY COEFFICIENT GENERATOR

MAIN CHANNEL VIDEO MIXERS

NOTE:
CH1 KEY & CH3 KEY MAY OR MAY NOT NEED TO BE DELAYED.

KEY SCALERS

KEY ADDERS

KEY SET TO "FF" IF OVERFLOW CONDITION OR IF BACKGROUNDS ARE ENABLED.

BORDER REGISTER

NOTE: FOR BORDERS, THE COEFFICIENT TABLE WILL ENSURE THAT THERE WILL BE NO INSTANCES OF OVERFLOW. THERE CAN BE AN OVERFLOW ONLY WHEN CH1 AND CH3 ARE PASSED THROUGH. IF BORDERS ARE ENABLED THEN NO OVERFLOW CAN OCCUR.

EDGE TRANSITION TABLE

EDGE COUNTER

COEFFICIENT TABLE ADDRESS COUNTER

COEFFICIENT TABLE

4K X 24 SRAM

SINGLE BUFFERED READ/WRITE CAPABLE

READ/WRITE CAPABLE

BACKGROUND & FADE RAMS

8K X 16 SRAM

FOR CHANNEL 1 SELECT BACKGROUND AS EITHER CHANNEL 3 OR FROM THE BACKGROUND RAMS. IN EITHER CASE, THE KEY WILL ALWAYS BE SET TO [1 - CHAR KEY].

DOUBLE BUFFERED BUT SINGLE IC. READ/WRITE CAPABLE

LINE TRANSITION TABLE

DOUBLE BUFFERED BUT SINGLE IC. READ/WRITE CAPABLE

REV.	ENGRG CHANGE NO.	DRN	CHKD.	APP'D.	
ORIGINAL ISSUE		SH			12-

CHYRON CORPORATION
6 Hub Drive
Melville, New York 11747

TITLE: DUAL CHANNEL SCRIBE F/X BOARD BLOCK DIAGRA

DOCUMENT NUMBER: 2Ac1730

PLOT SCALED BY

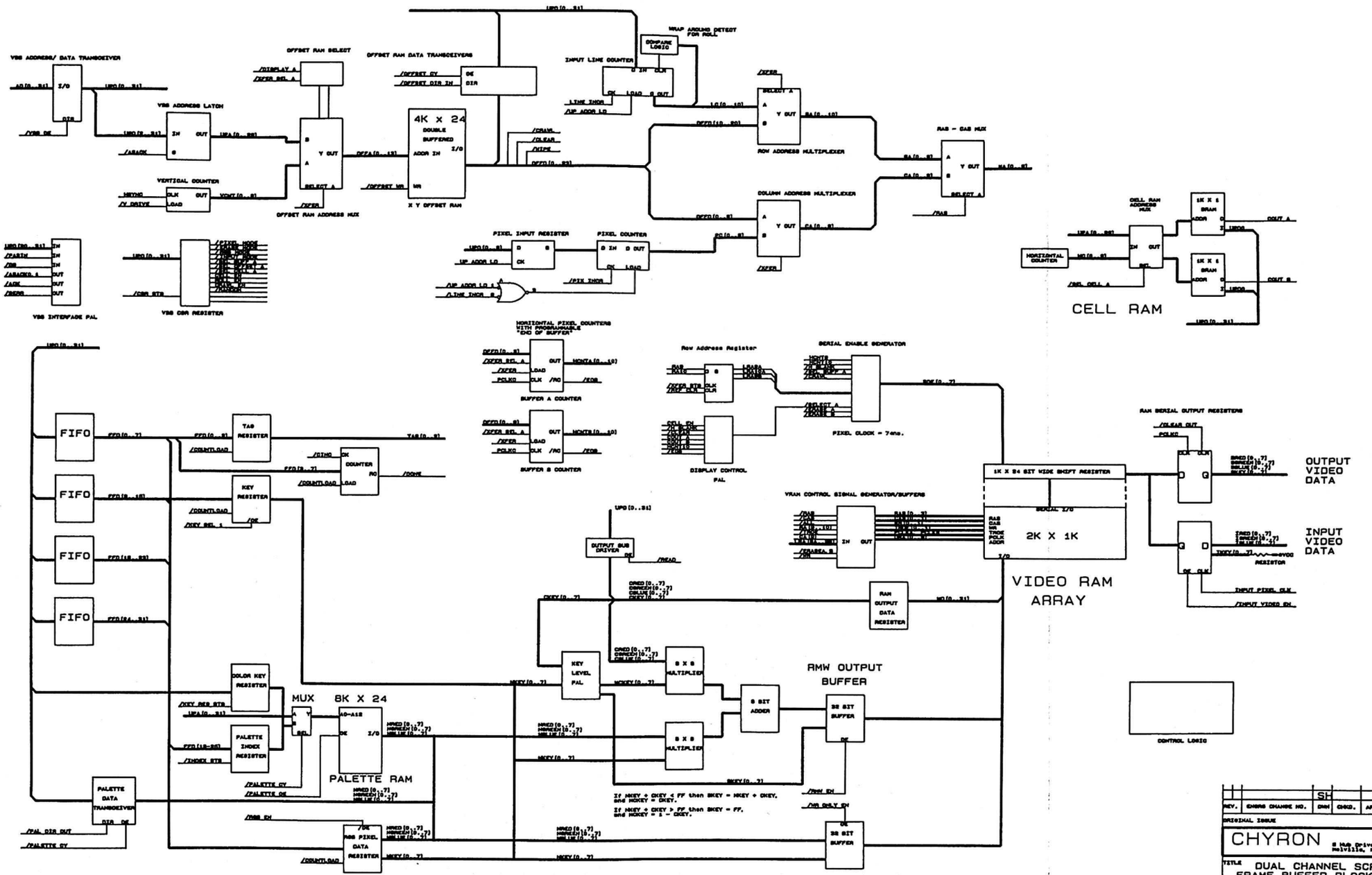

REV.	ENGRG CHANGE NO.	DRN	CHKD.	APP'D.
ORIGINAL ISSUE				

CHYRON 8 Hub Drive Melville, New Y

TITLE DUAL CHANNEL SCRIE FRAME BUFFER BLOCK D

DOCUMENT NUMBER 2A01731